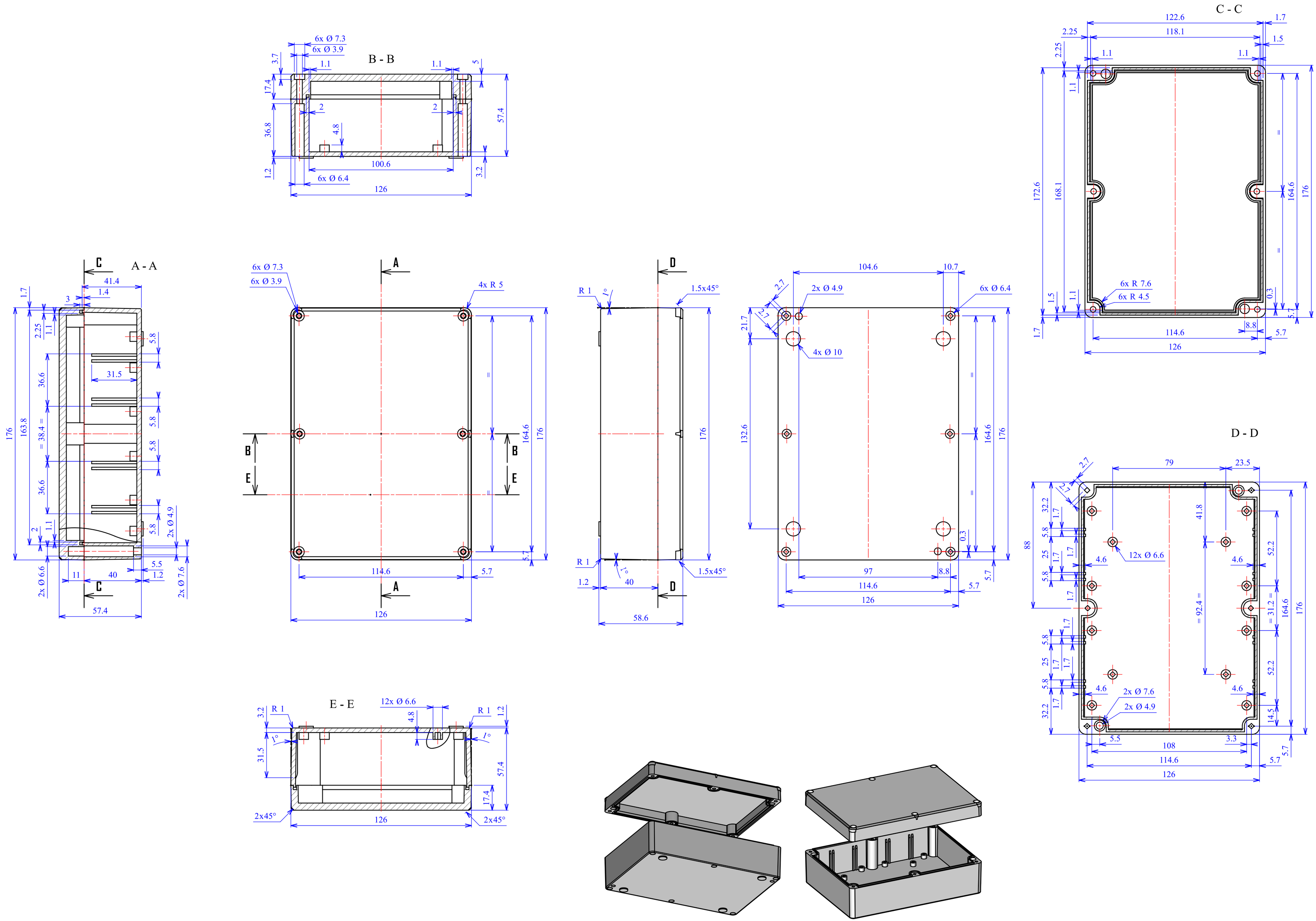
B - B
6x Ø 7.3
6x Ø 3.9
6x Ø 6.4
100.6
126
C - C
122.6
118.1
6x R 7.6
6x R 4.5
114.6
126
A - A
41.4
31.5
2x Ø 4.9
2x Ø 6.6
2x Ø 7.6
57.4
4x R 5
164.6
176
R 1
1.5x45°
58.6
104.6
10.7
2x Ø 4.9
4x Ø 10
6x Ø 6.4
132.6
97
D - D
79
23.5
12x Ø 6.6
2x Ø 7.6
2x Ø 4.9
108
E - E
12x Ø 6.6
2x45°

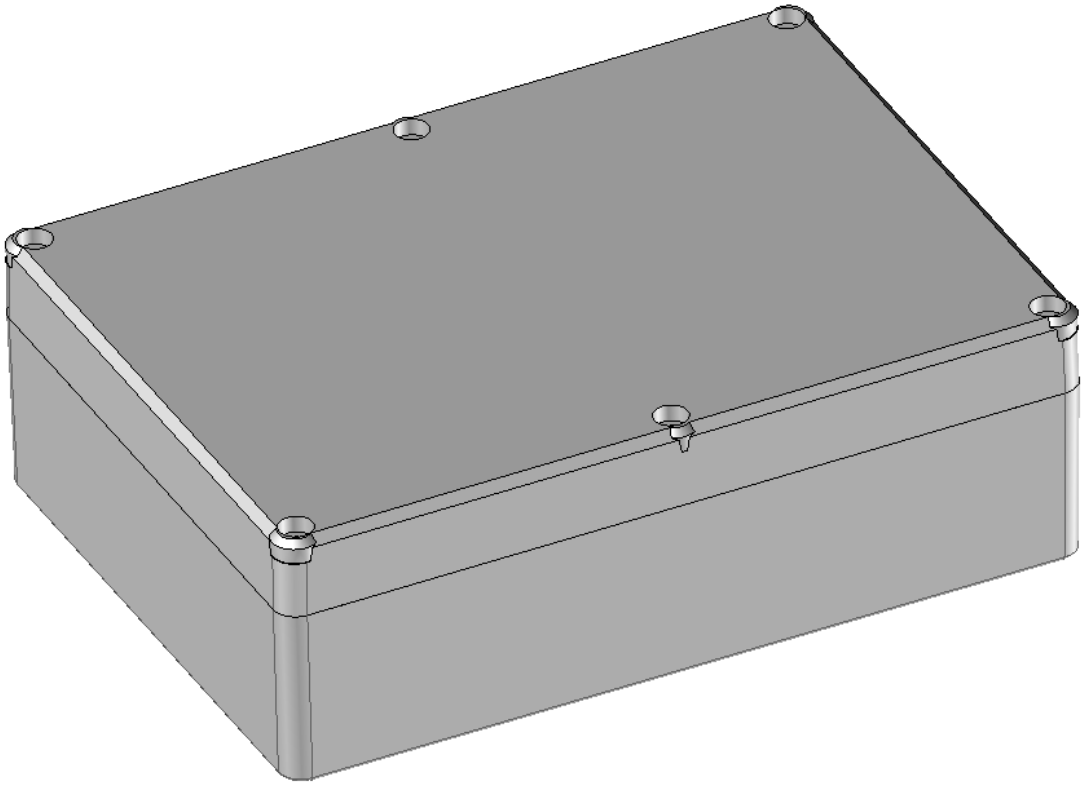

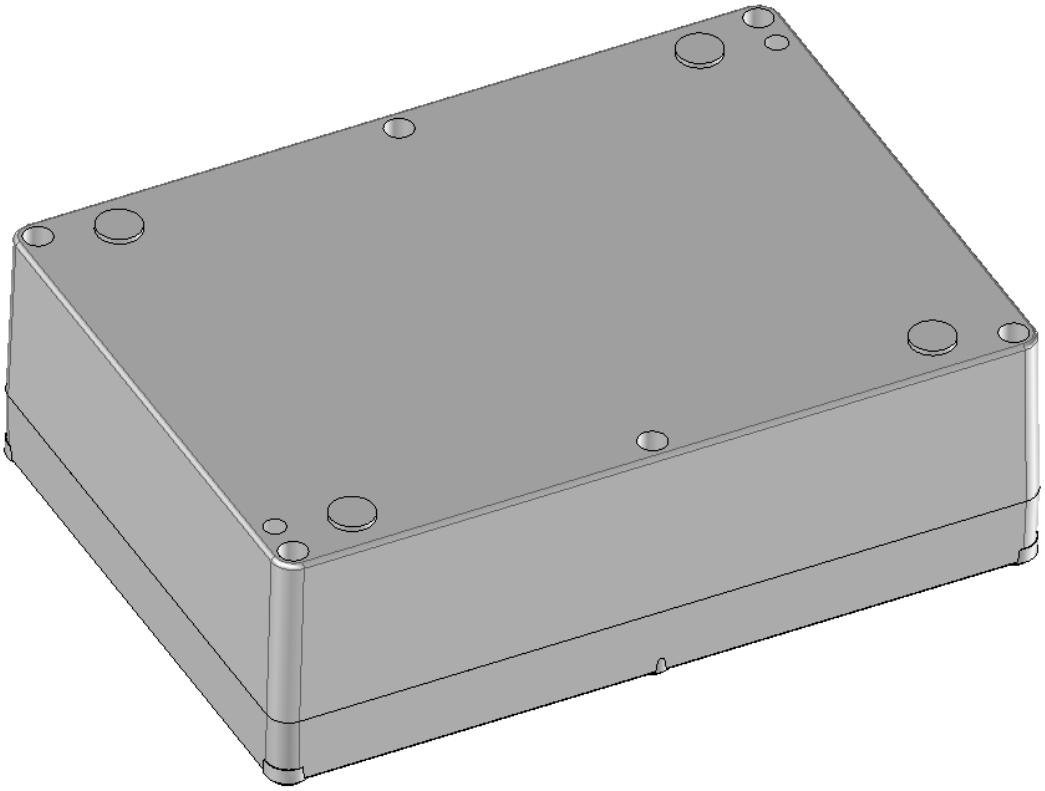

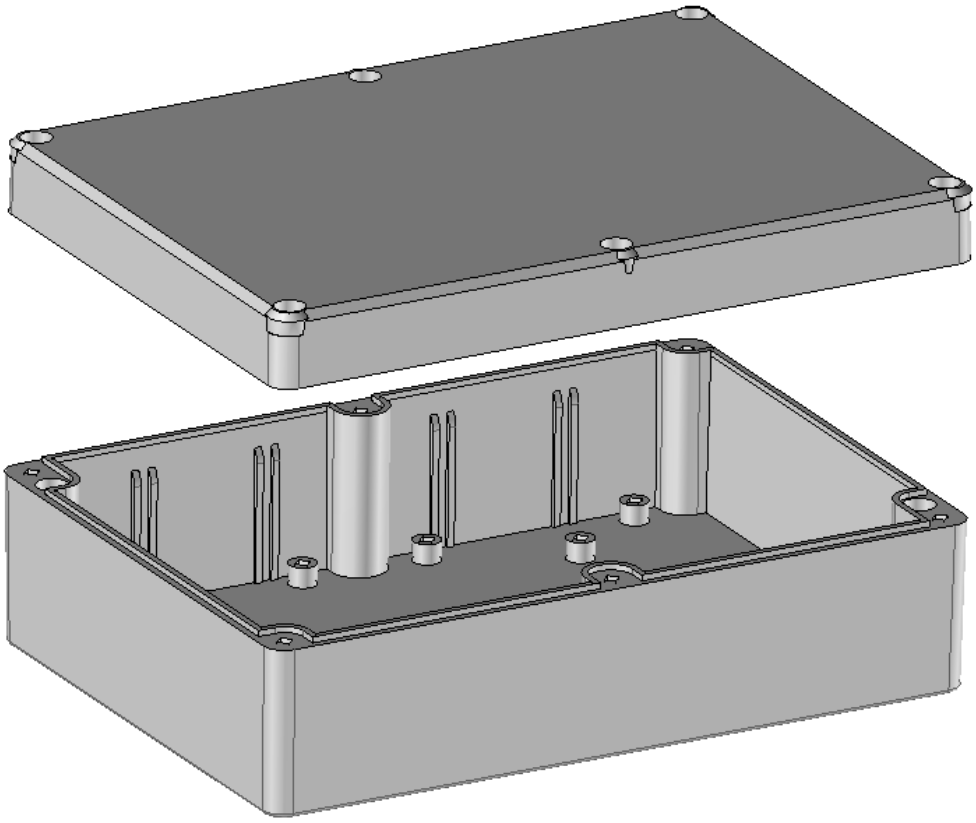

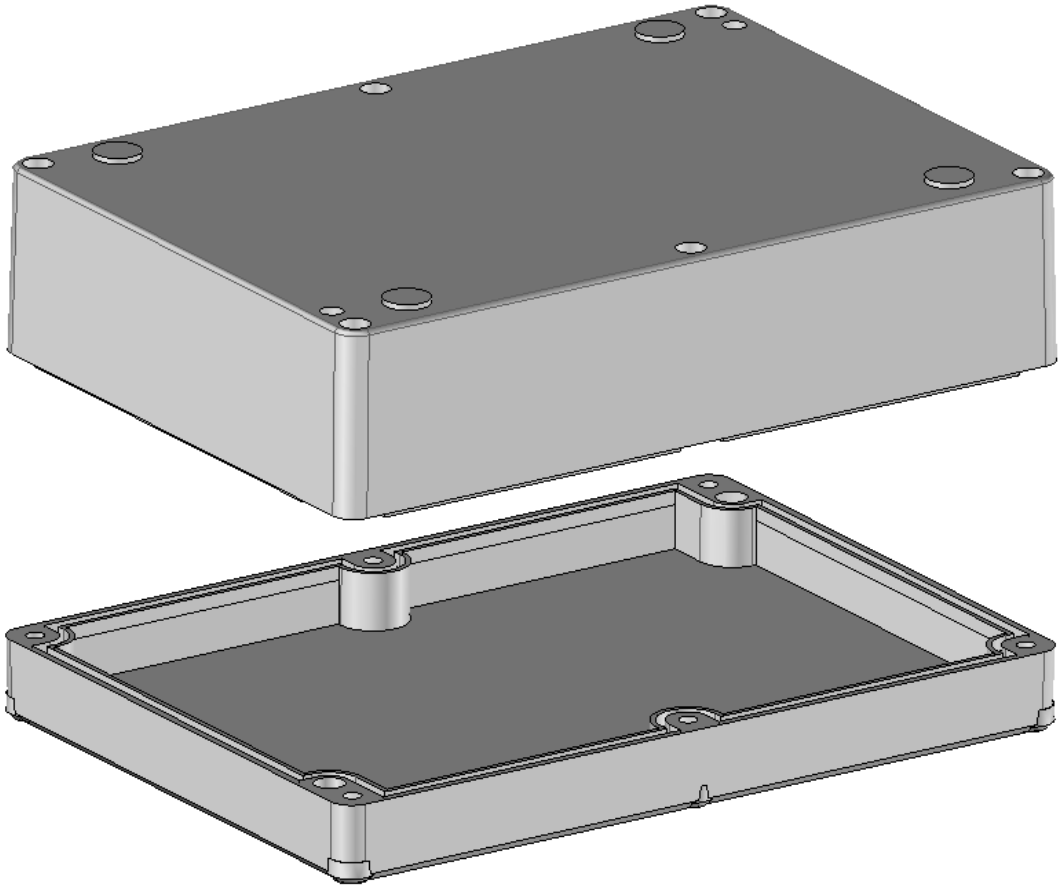

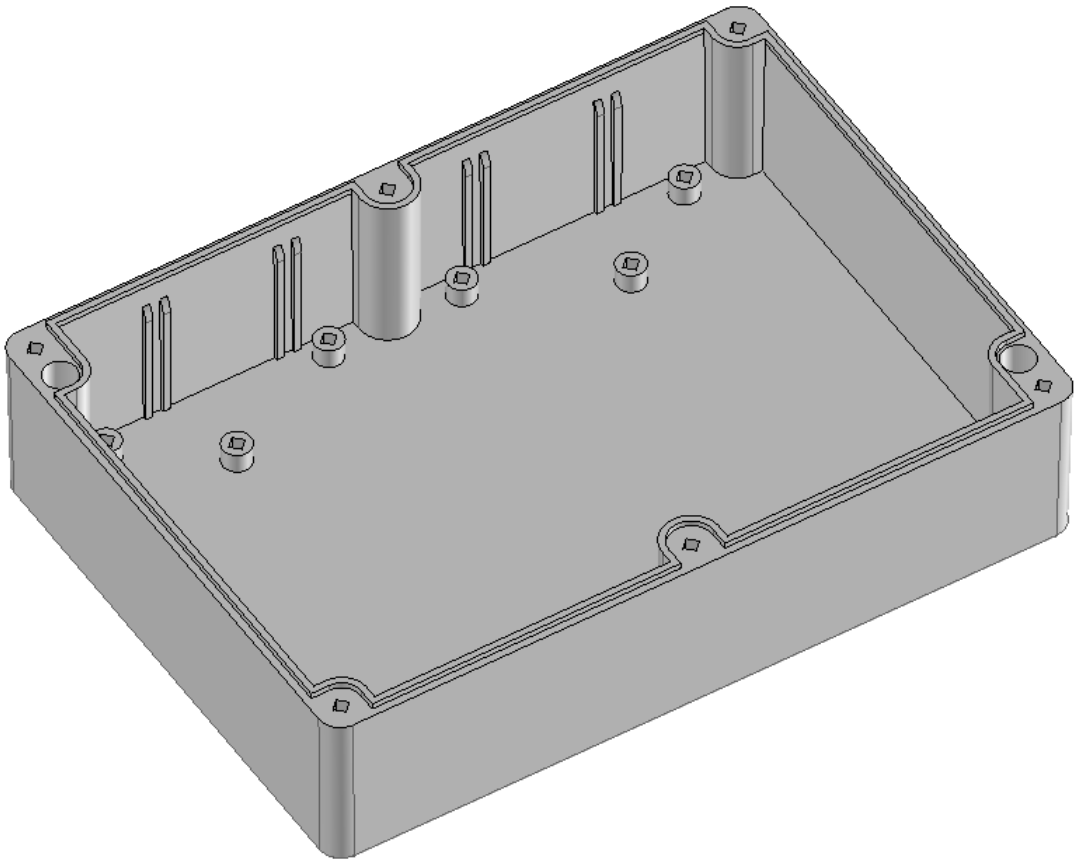

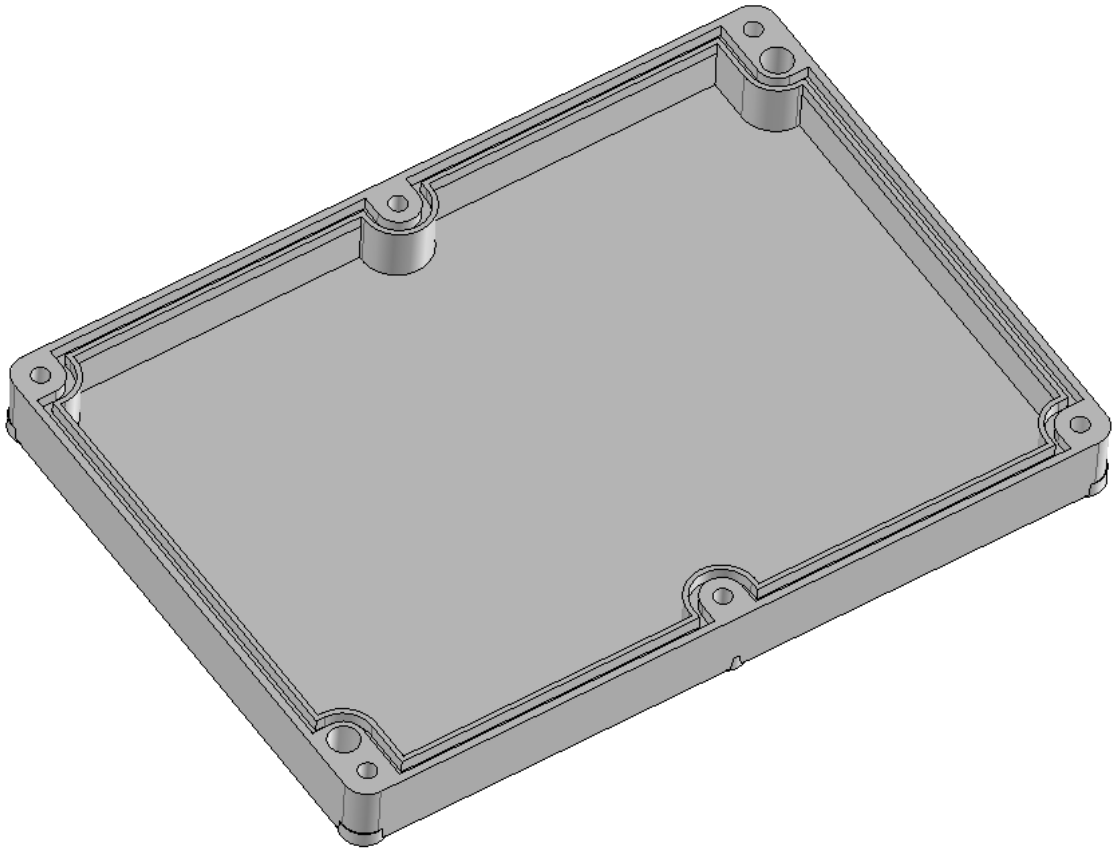

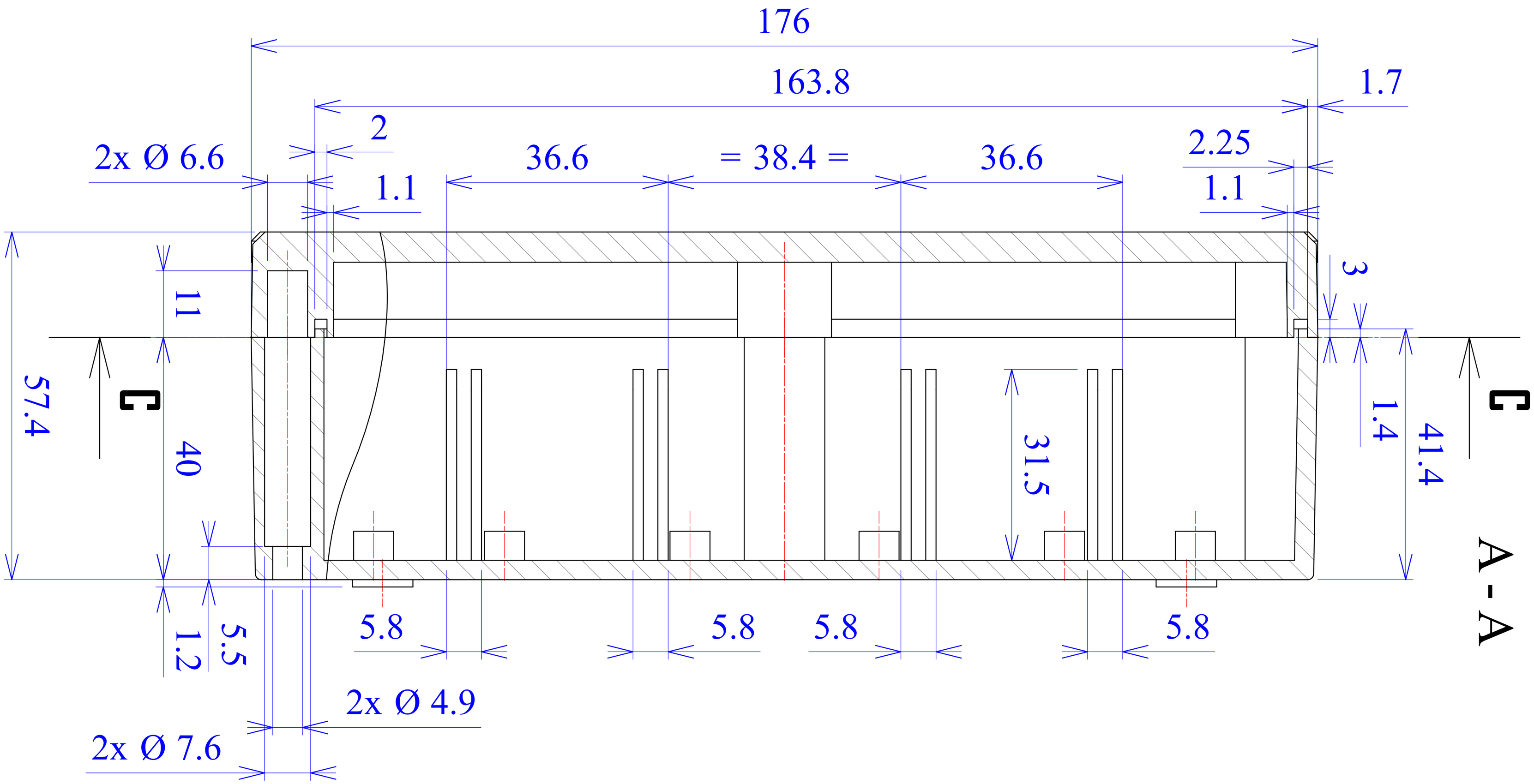
176
163.8
1.7
2
2x Ø 6.6
36.6
= 38.4 =
36.6
2.25
1.1
1.1
3
11
57.4
40
1.4
41.4
31.5
5.8
5.8
5.8
5.8
5.5
1.2
2x Ø 4.9
2x Ø 7.6
A - A

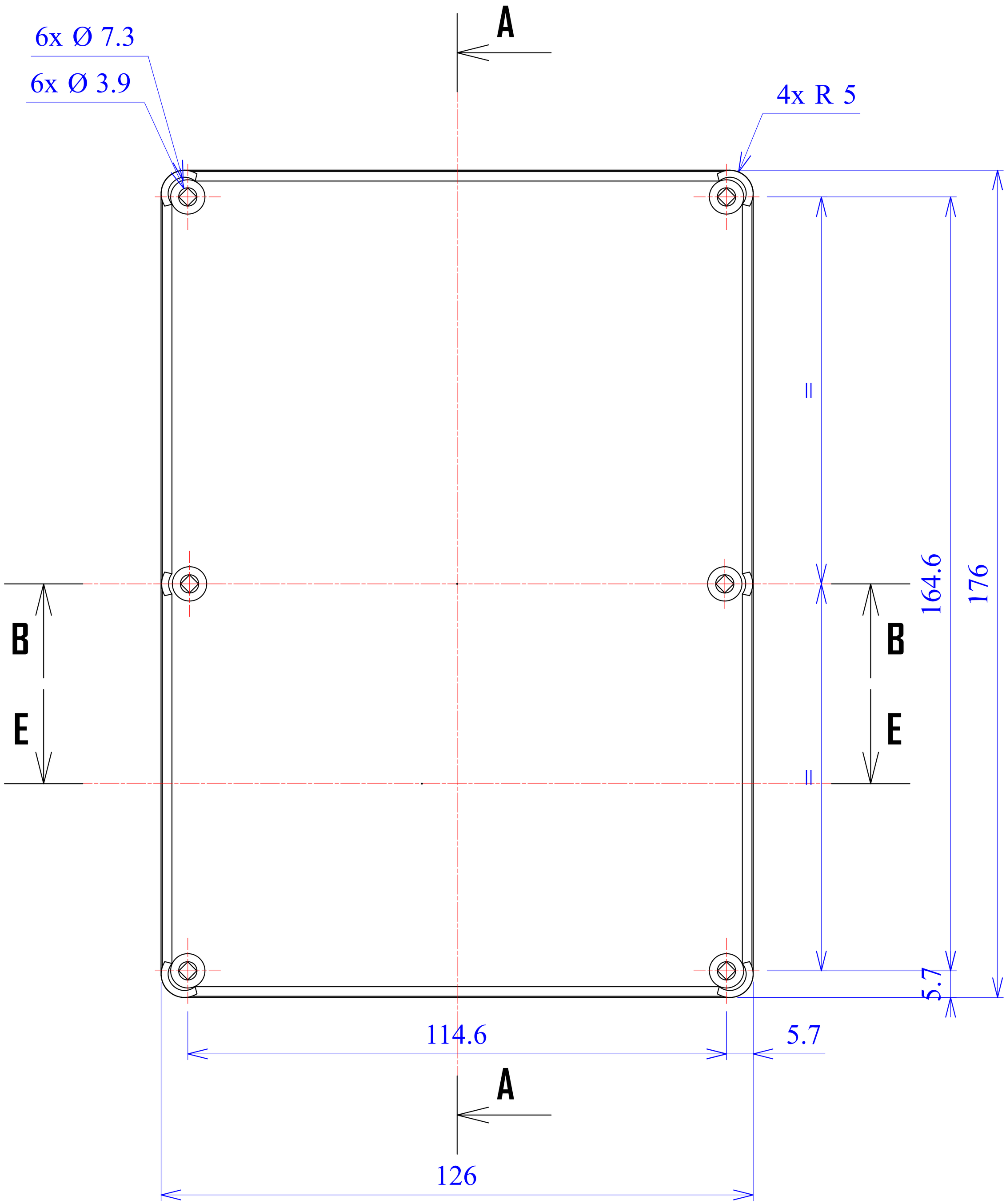
6x Ø 7.3
6x Ø 3.9
A
4x R 5
II
164.6
176
B
E
B
E
II
5.7
114.6
5.7
A
126

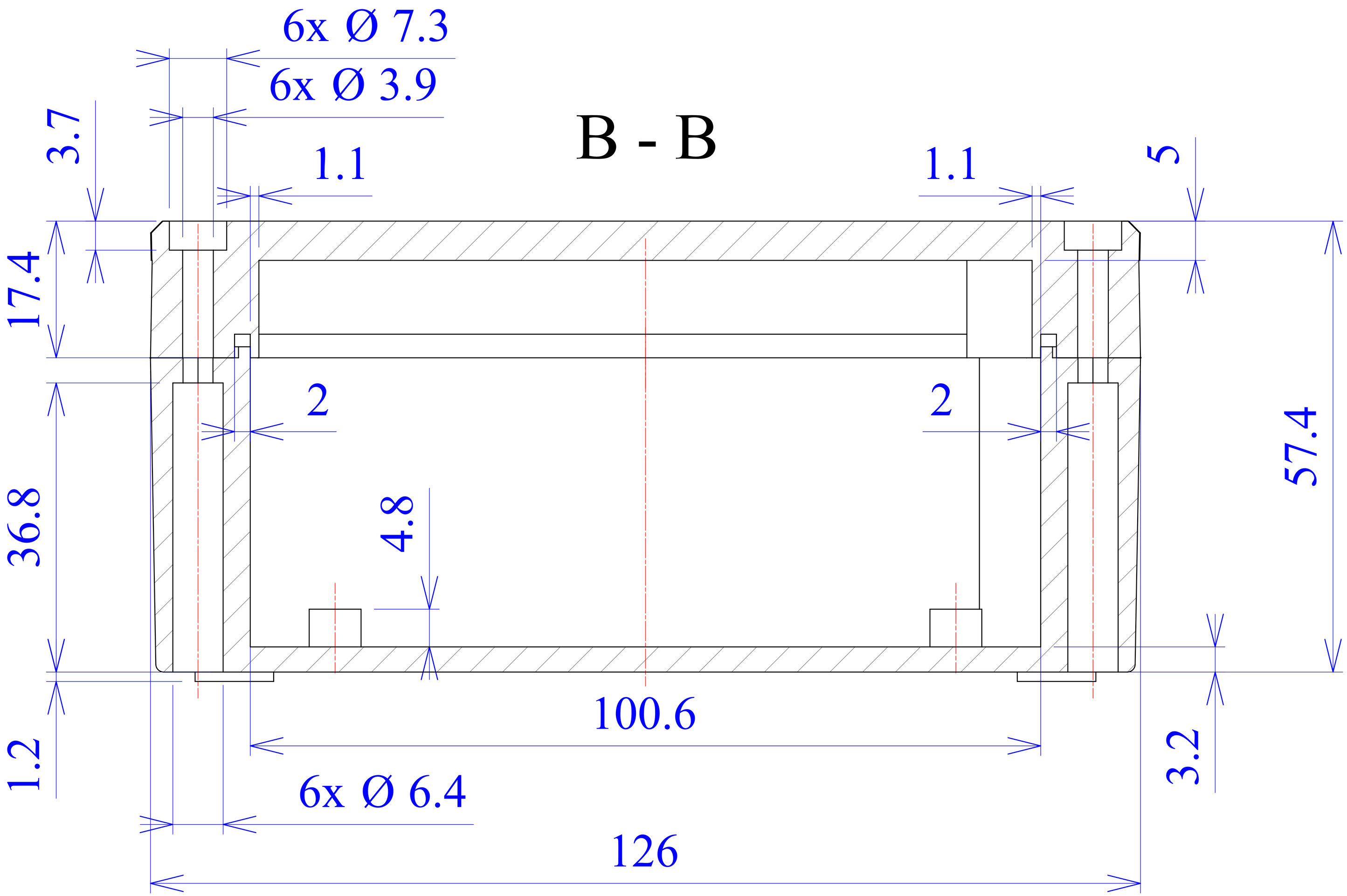
B - B
6x Ø 7.3
6x Ø 3.9
3.7
1.1
1.1
5
17.4
2
2
36.8
4.8
57.4
100.6
1.2
3.2
6x Ø 6.4
126

E - E

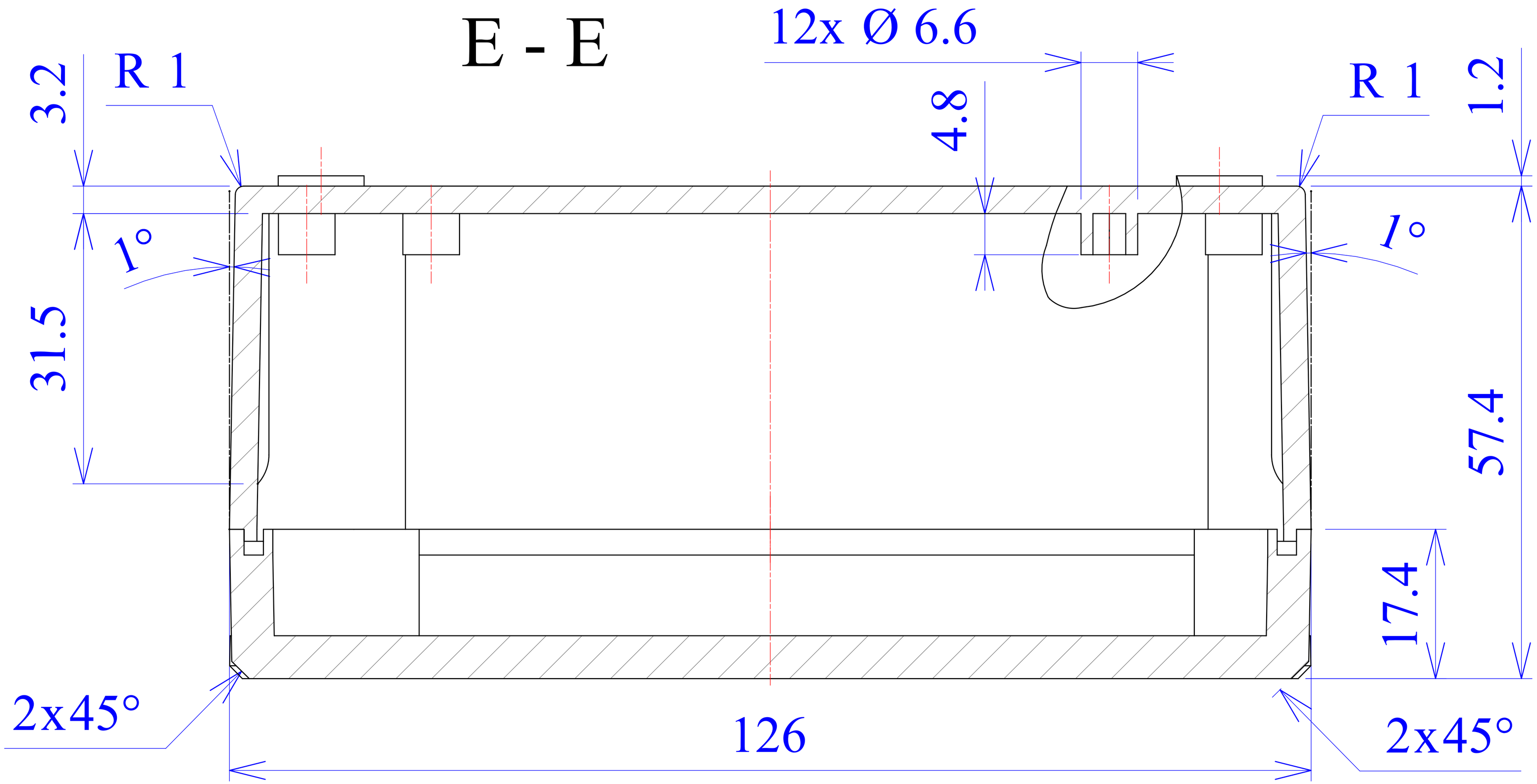

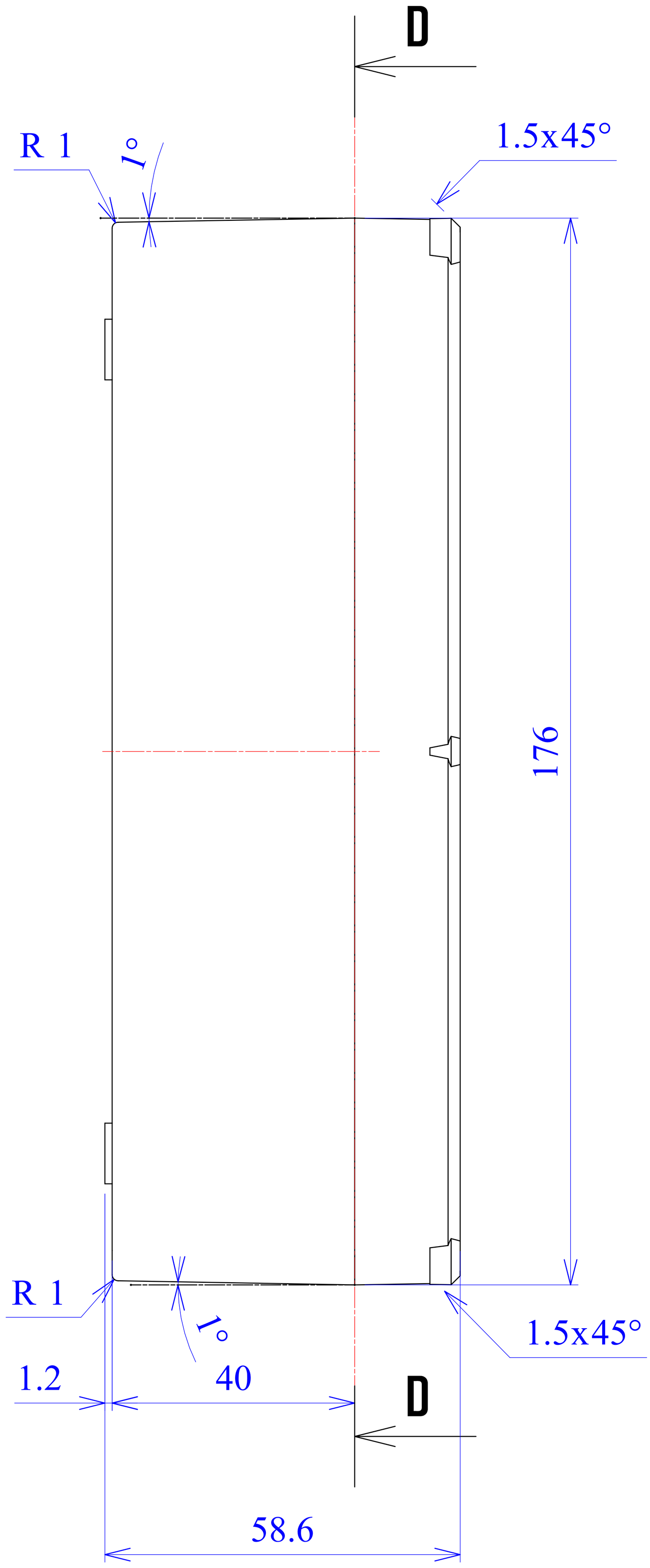
D
R 1
1°
1.5x45°
176
R 1
1°
1.5x45°
1.2
40
D
58.6

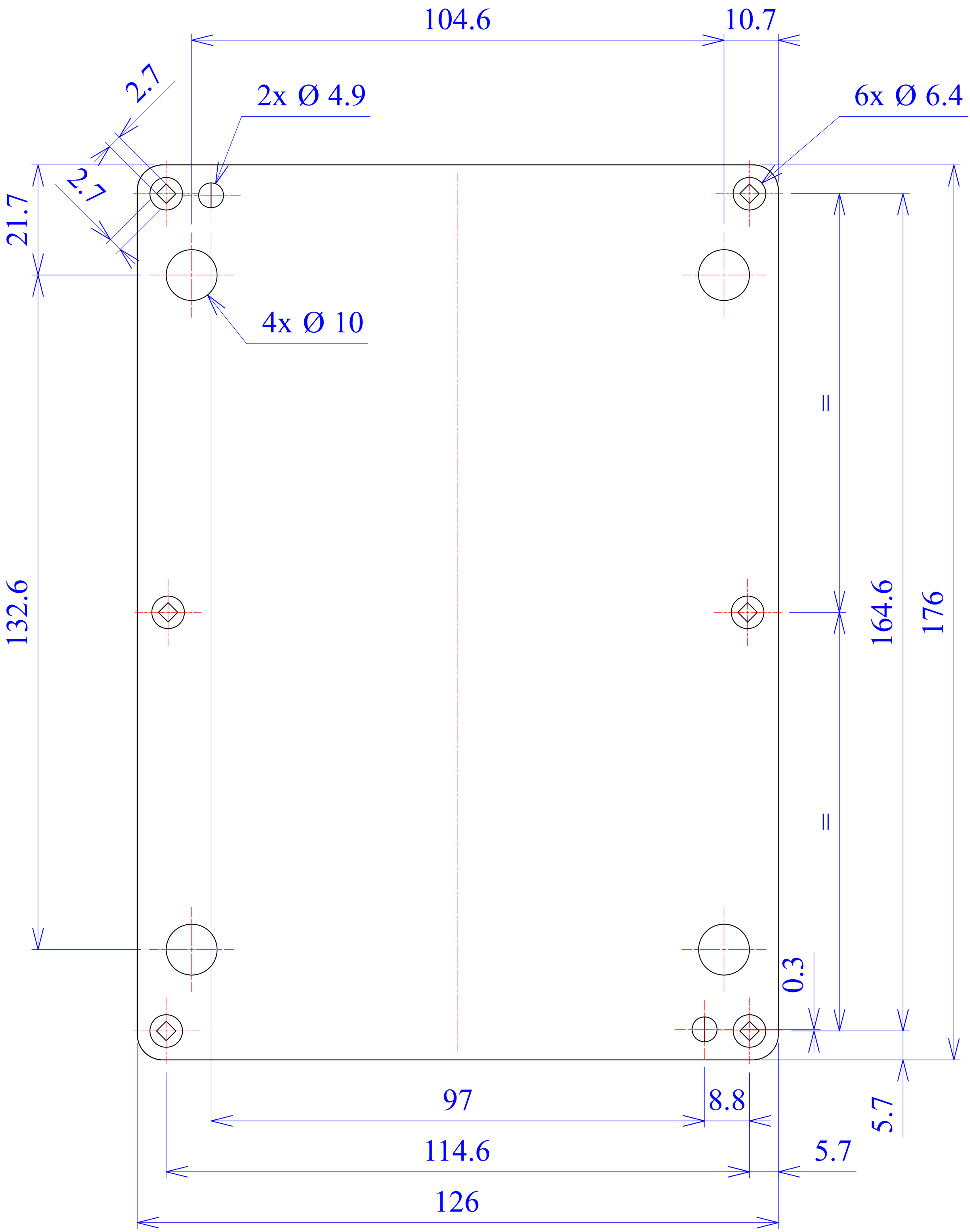
104.6
10.7
2.7
2x Ø 4.9
6x Ø 6.4
2.7
21.7
4x Ø 10
=
132.6
164.6
176
=
0.3
97
8.8
5.7
114.6
5.7
126

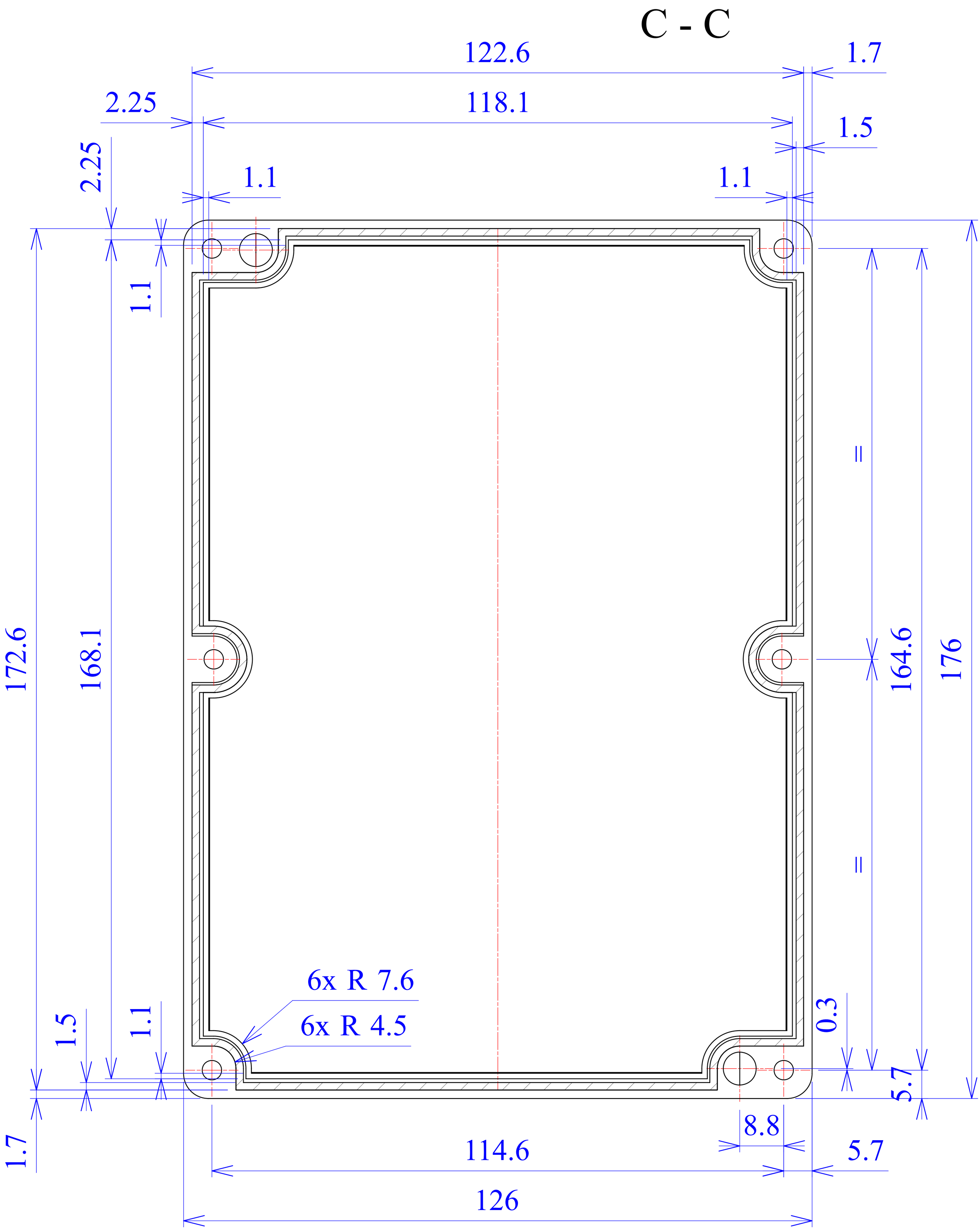
C - C
122.6
1.7
2.25
118.1
1.5
2.25
1.1
1.1
1.1
172.6
168.1
164.6
176
6x R 7.6
6x R 4.5
1.5
1.1
0.3
5.7
1.7
8.8
114.6
5.7
126

D - D

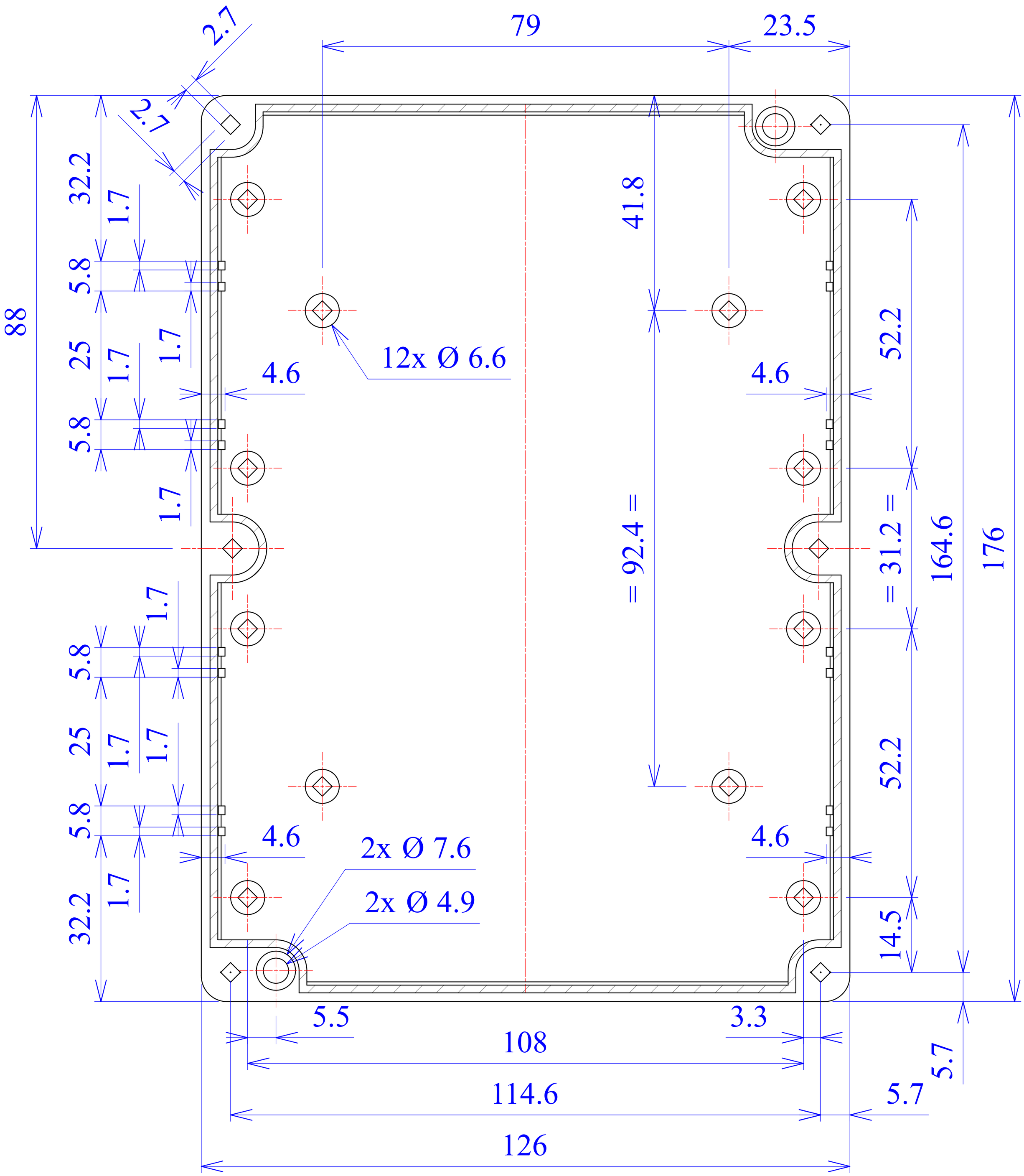
2.7
1.2
79
23.5
88
32.2
1.7
5.8
25
1.7
1.7
5.8
1.7
1.7
5.8
25
1.7
1.7
5.8
32.2
1.7
4.6
12x Ø 6.6
4.6
2x Ø 7.6
2x Ø 4.9
41.8
= 92.4 =
4.6
52.2
= 31.2 =
164.6
176
52.2
4.6
14.5
5.5
3.3
108
114.6
126
5.7
5.7