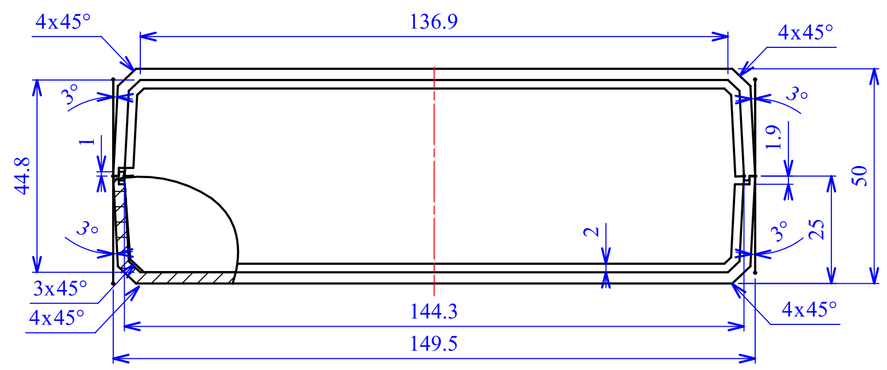
4x45°
136.9
4x45°
3°
1
1.9
44.8
50
25
2
3x45°
4x45°
144.3
149.5
4x45°

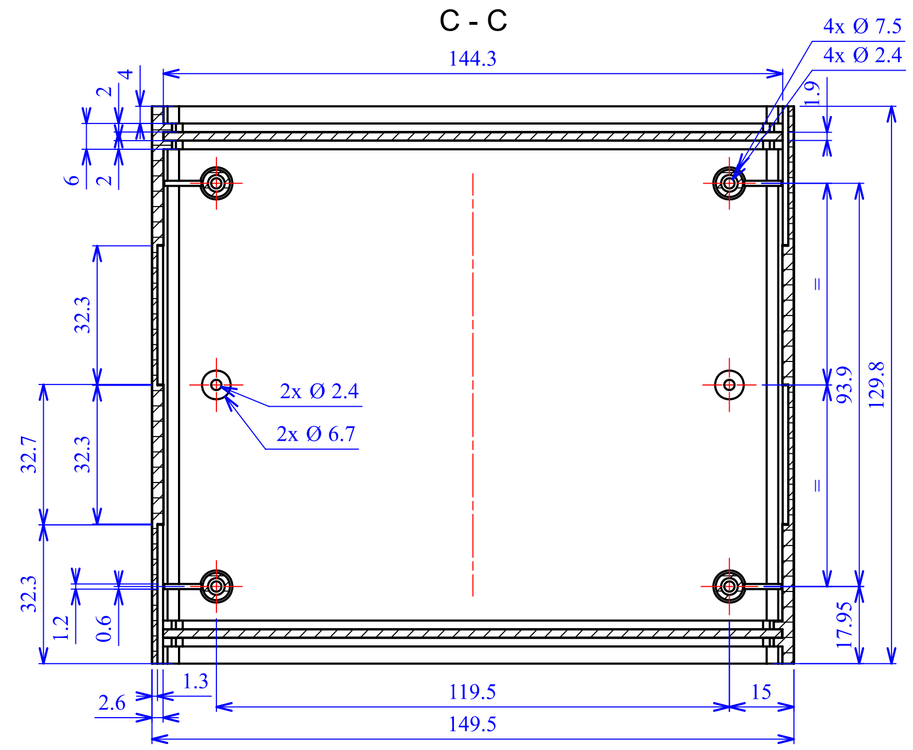
C - C
144.3
4x Ø 7.5
4x Ø 2.4
1.9
2
4
6
2
32.3
32.7
32.3
32.3
1.2
0.6
2x Ø 2.4
2x Ø 6.7
93.9
129.8
17.95
2.6
1.3
119.5
15
149.5

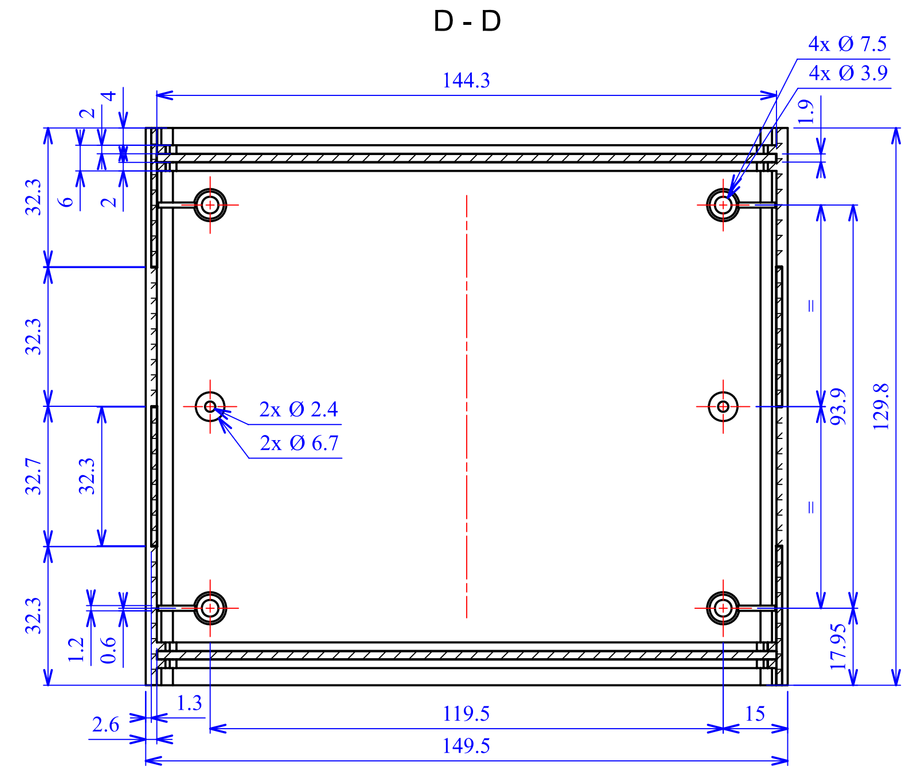
D - D
144.3
4x Ø 7.5
4x Ø 3.9
1.9
2
4
6
2
32.3
32.3
32.7
32.3
32.3
1.2
0.6
2x Ø 2.4
2x Ø 6.7
93.9
129.8
17.95
2.6
1.3
119.5
15
149.5

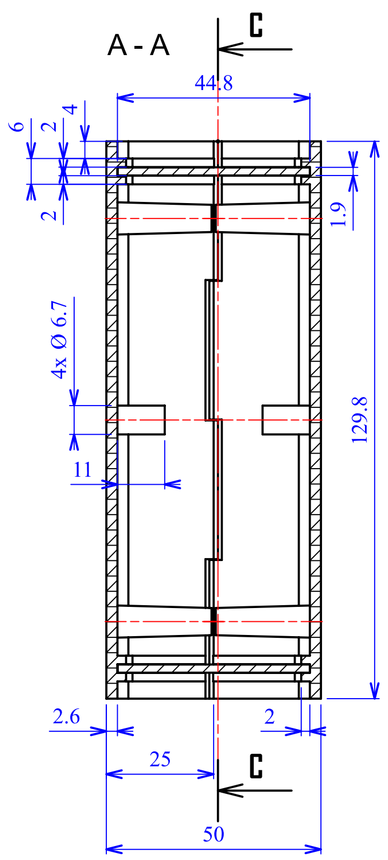
A - A
C
44.8
6
2
4
2
1.9
4x Ø 6.7
11
129.8
2.6
2
25
C
50

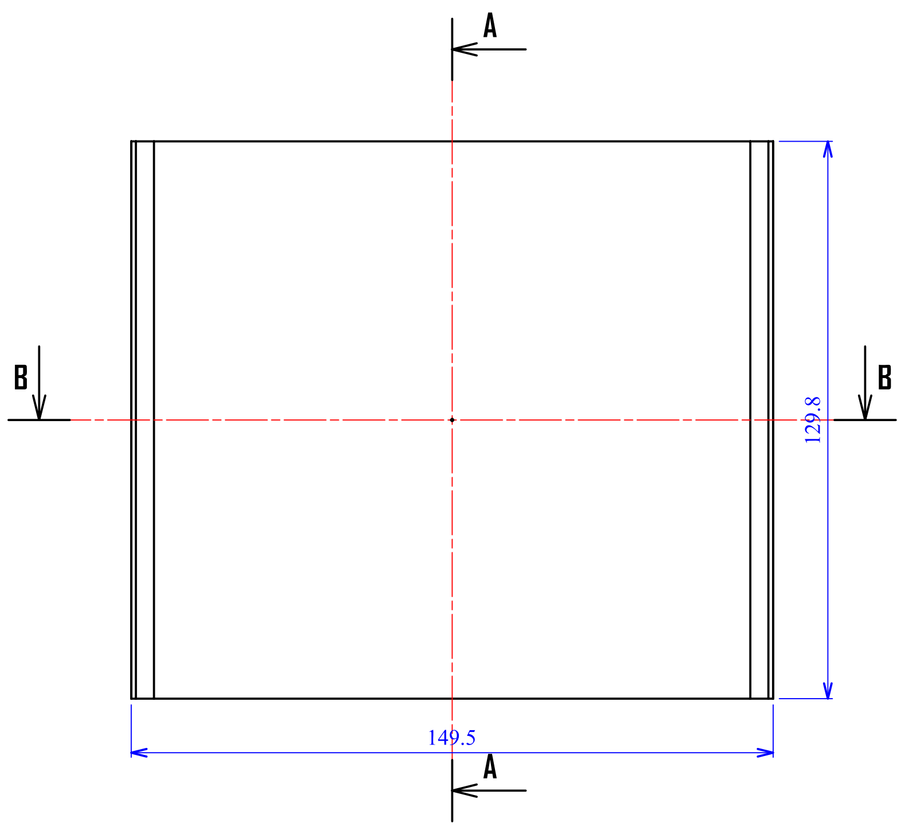
A
B
B
129.8
149.5
A

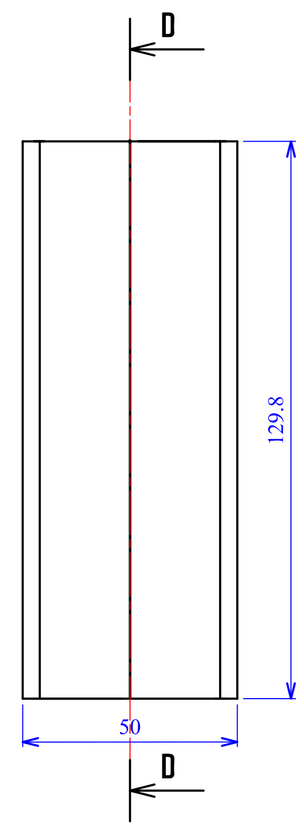
D
129.8
50
D

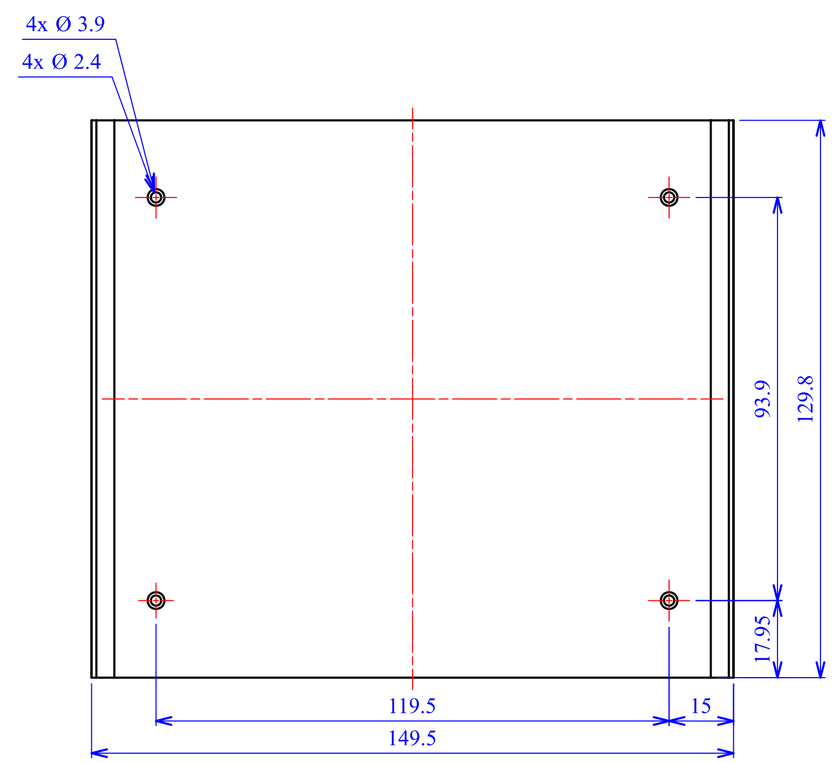
4x Ø 3.9
4x Ø 2.4
93.9
129.8
17.95
119.5
15
149.5

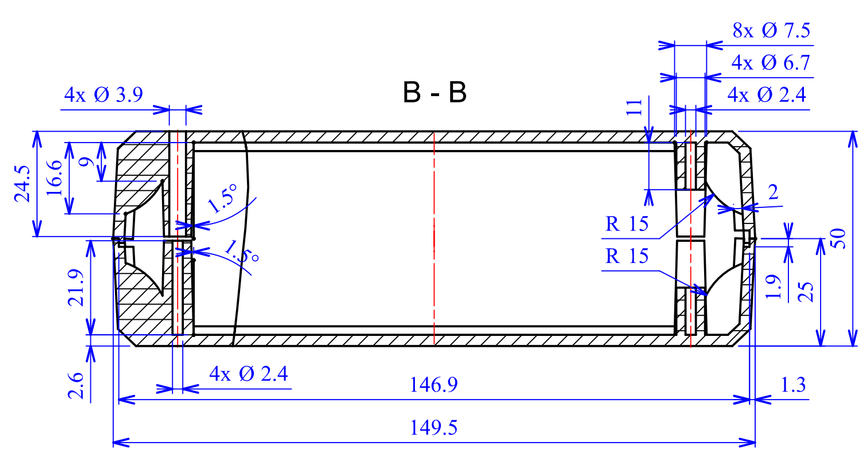
B - B
4x Ø 3.9
8x Ø 7.5
4x Ø 6.7
4x Ø 2.4
11
24.5
16.6
9
1.5°
1.5°
21.9
2.6
R 15
R 15
2
1.9
25
50
4x Ø 2.4
146.9
1.3
149.5

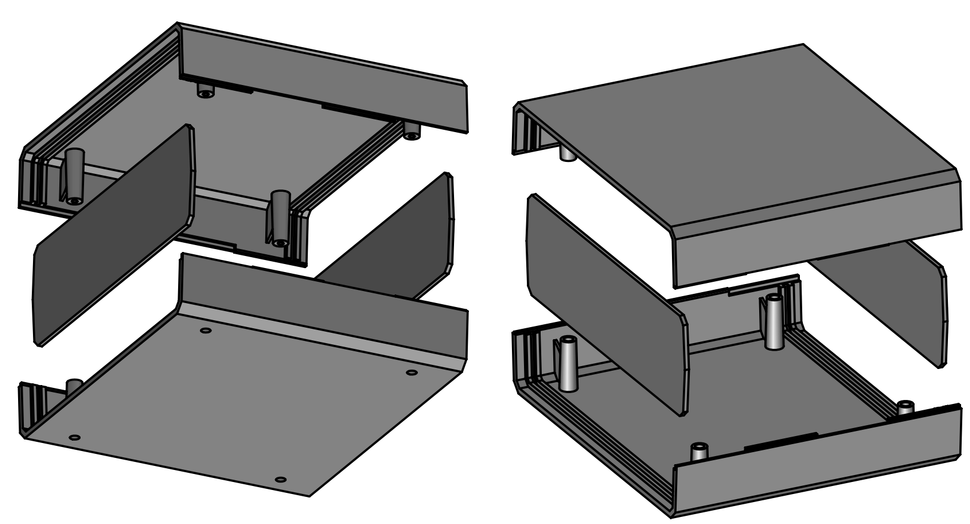

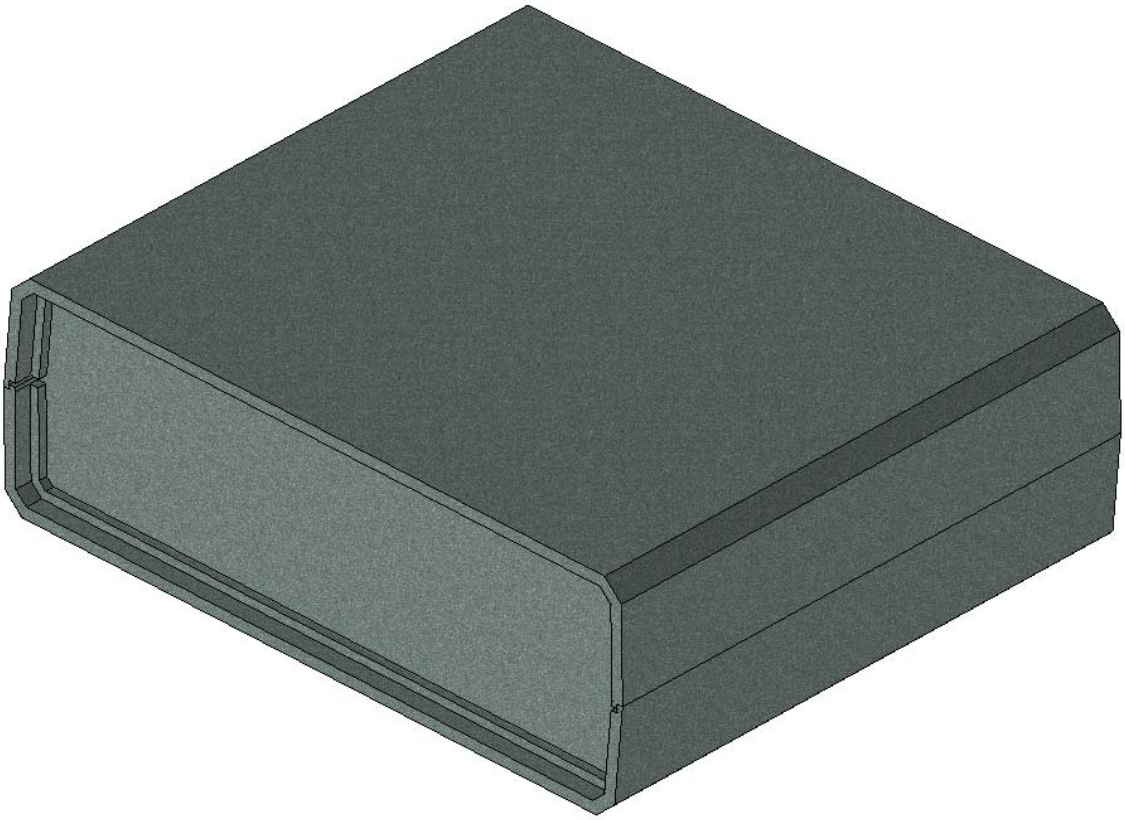

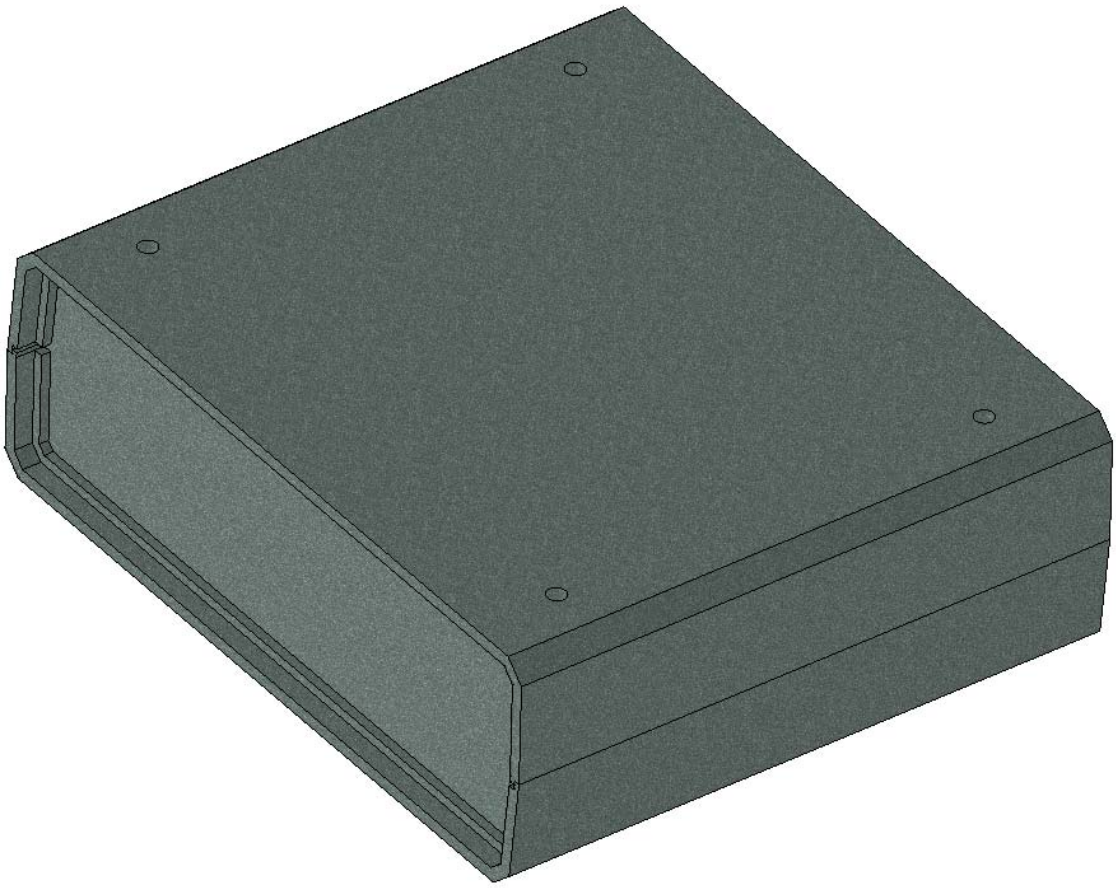

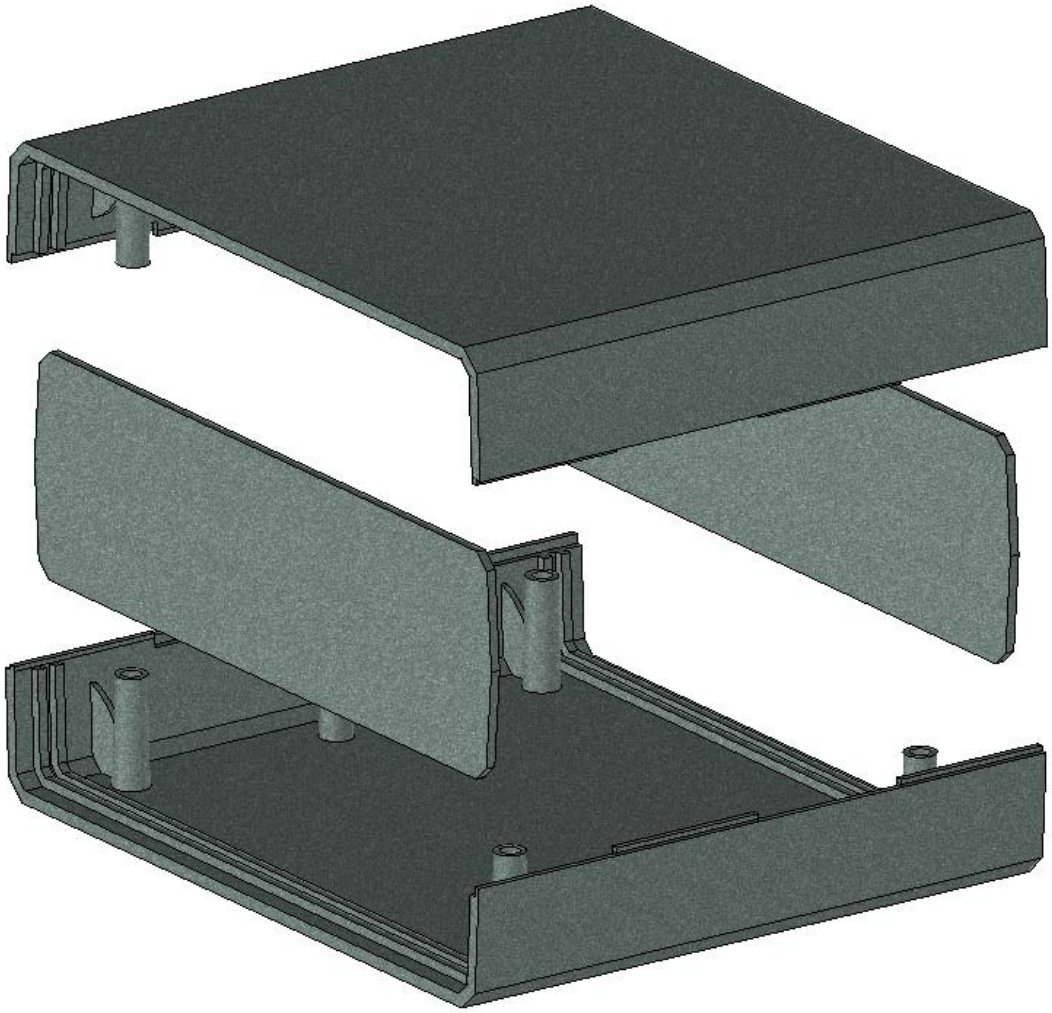

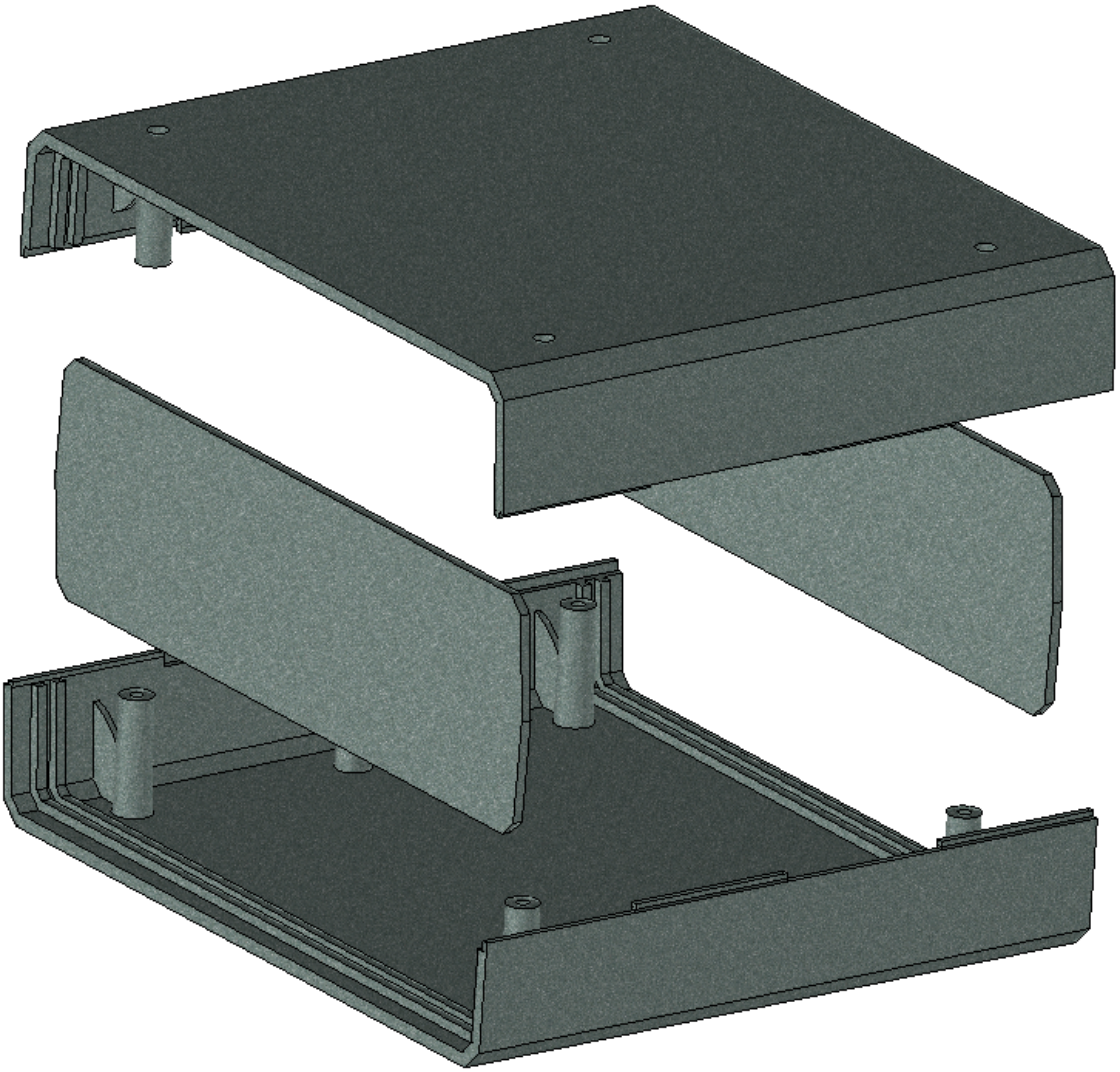

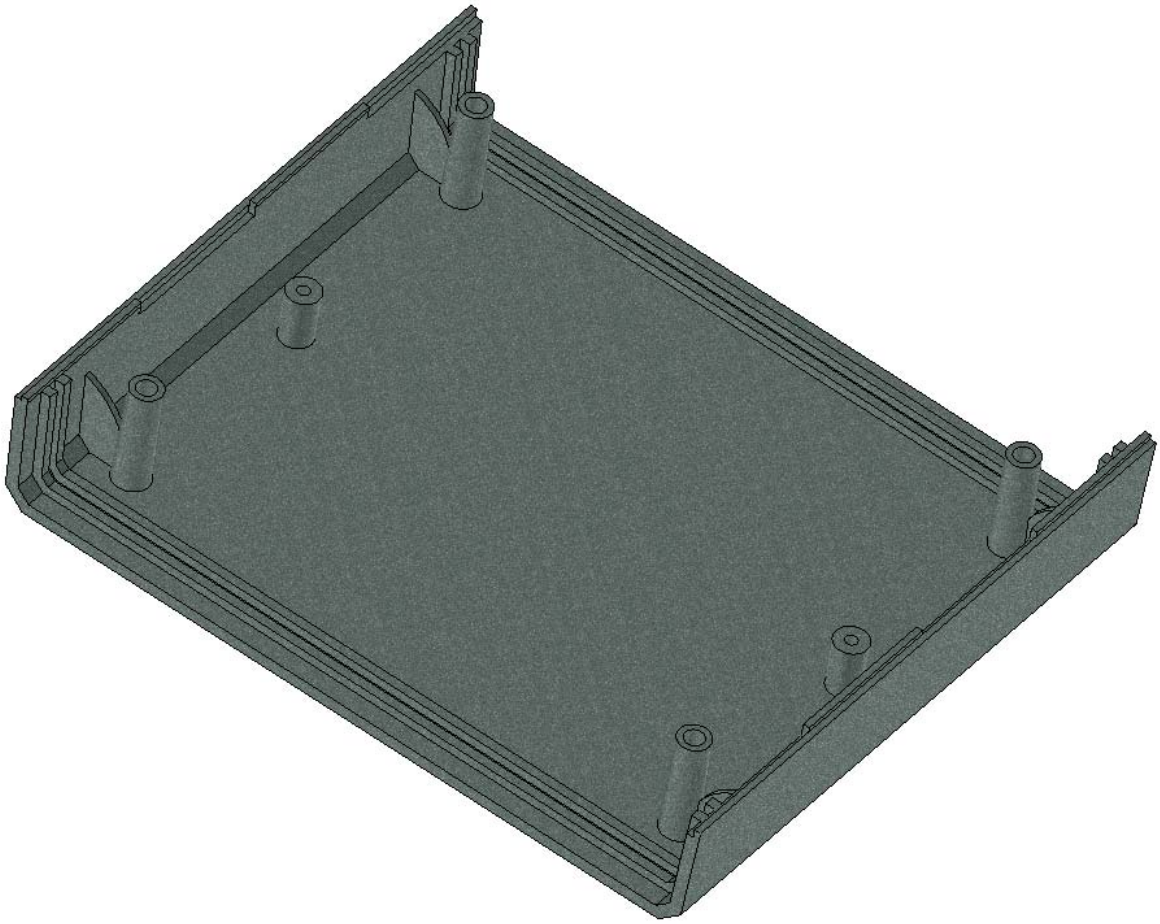

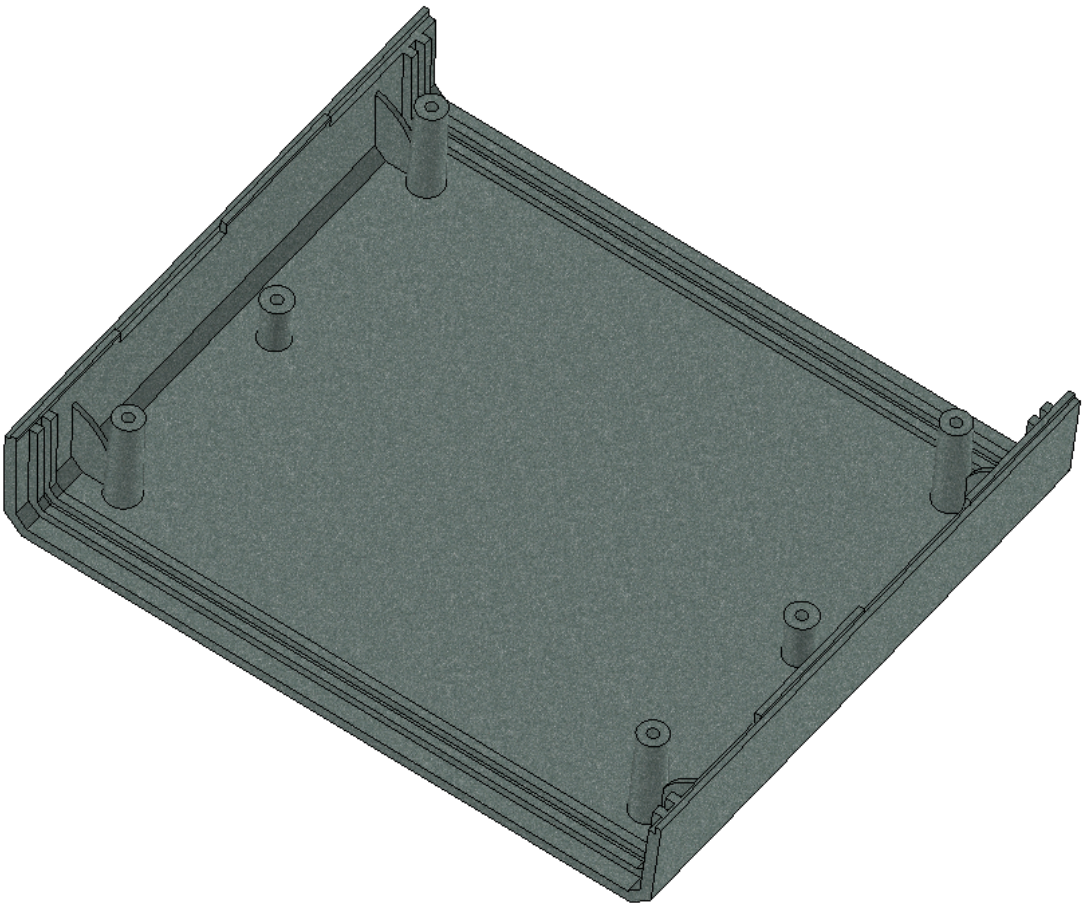

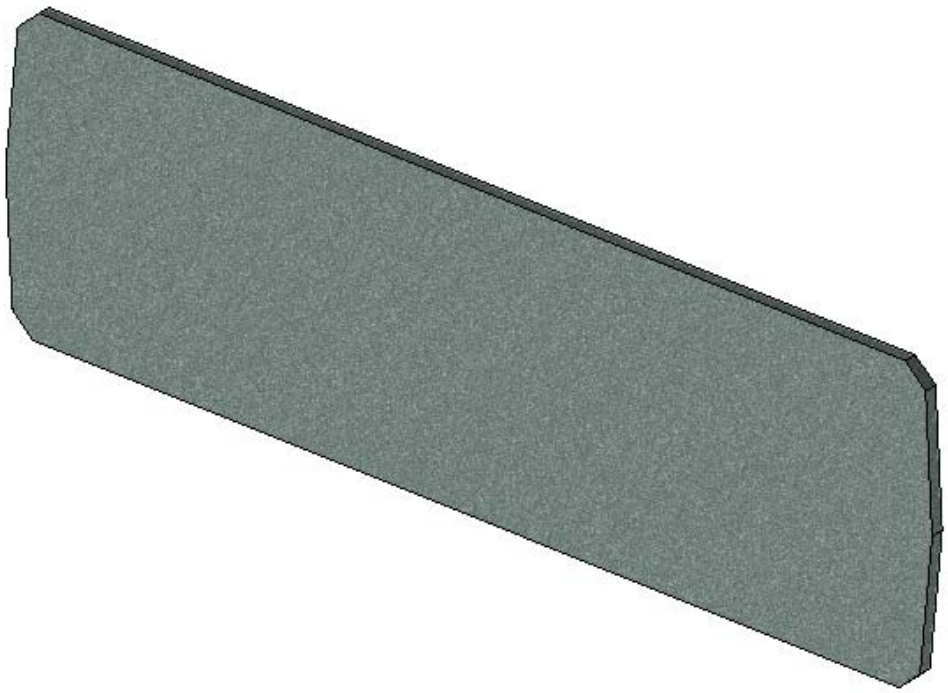

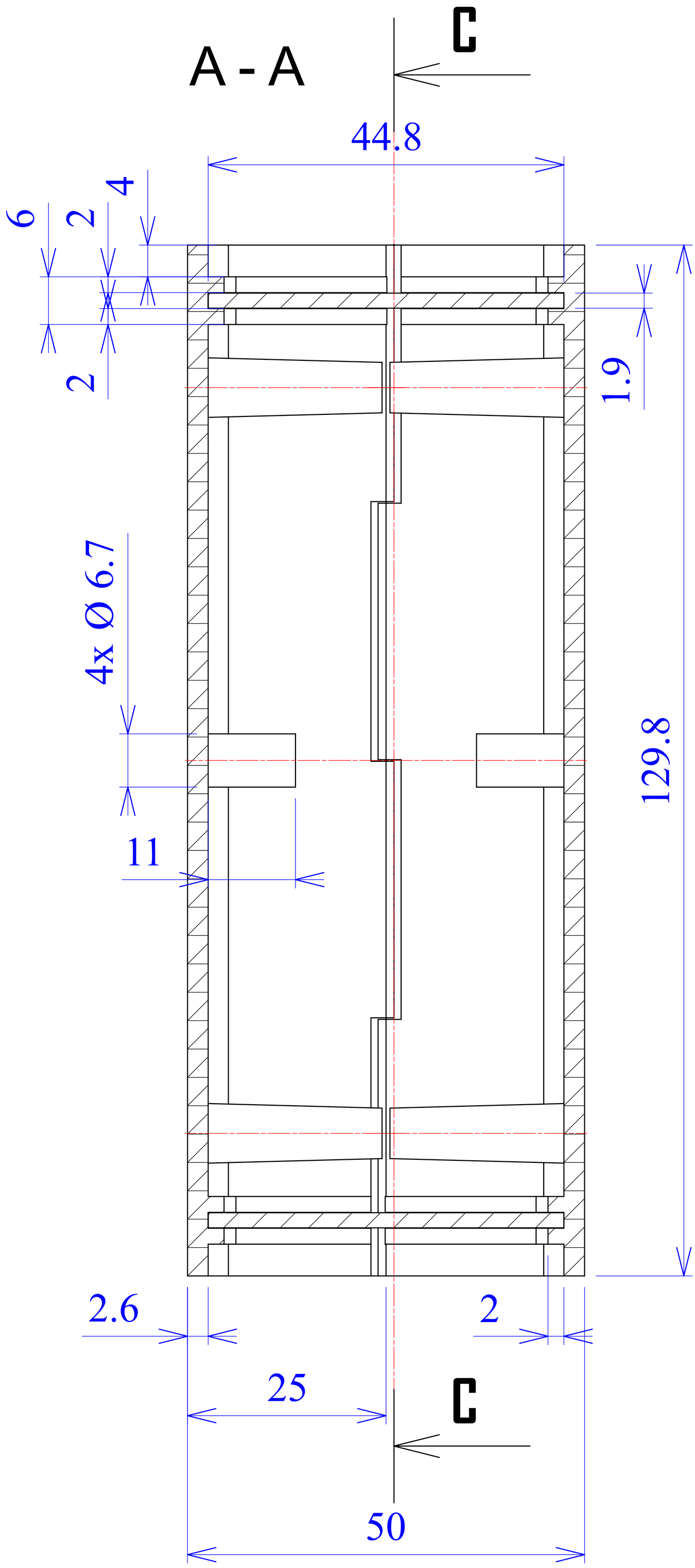
A - A
C
44.8
4
6
2
2
1.9
4x Ø 6.7
11
129.8
2.6
2
25
C
50

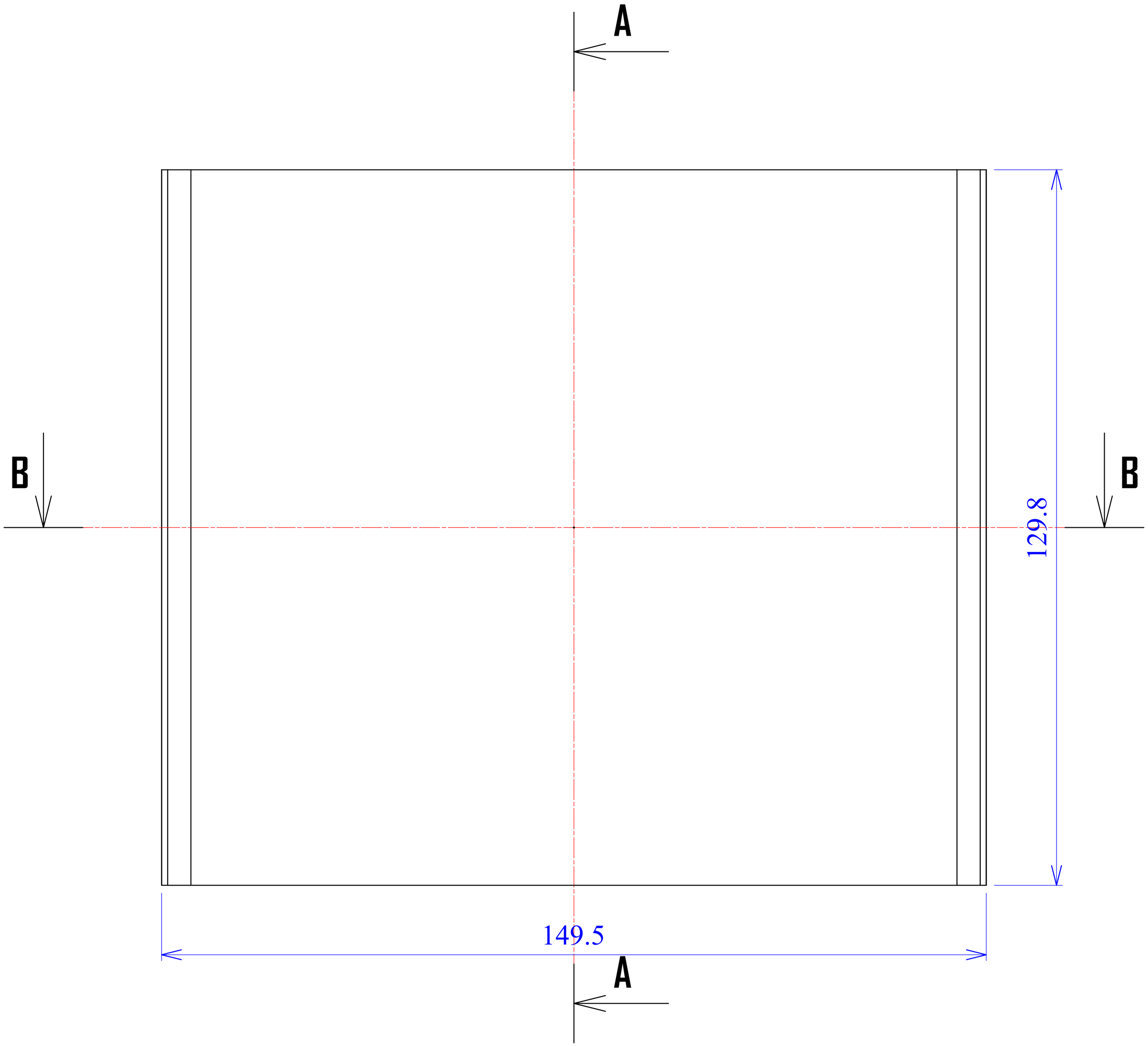
A
B
B
129.8
149.5
A

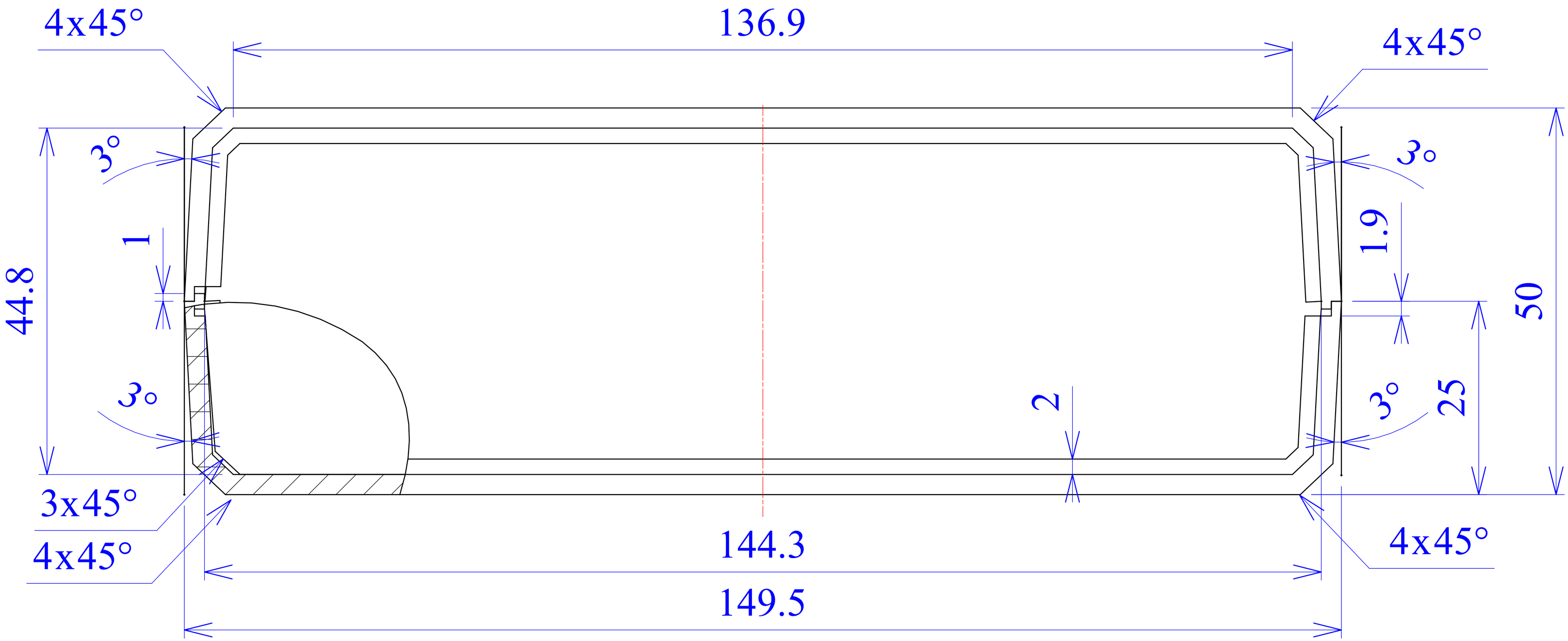
4x45°
136.9
4x45°
3°
3°
1
1.9
44.8
50
3°
2
3°
25
3x45°
4x45°
144.3
4x45°
149.5

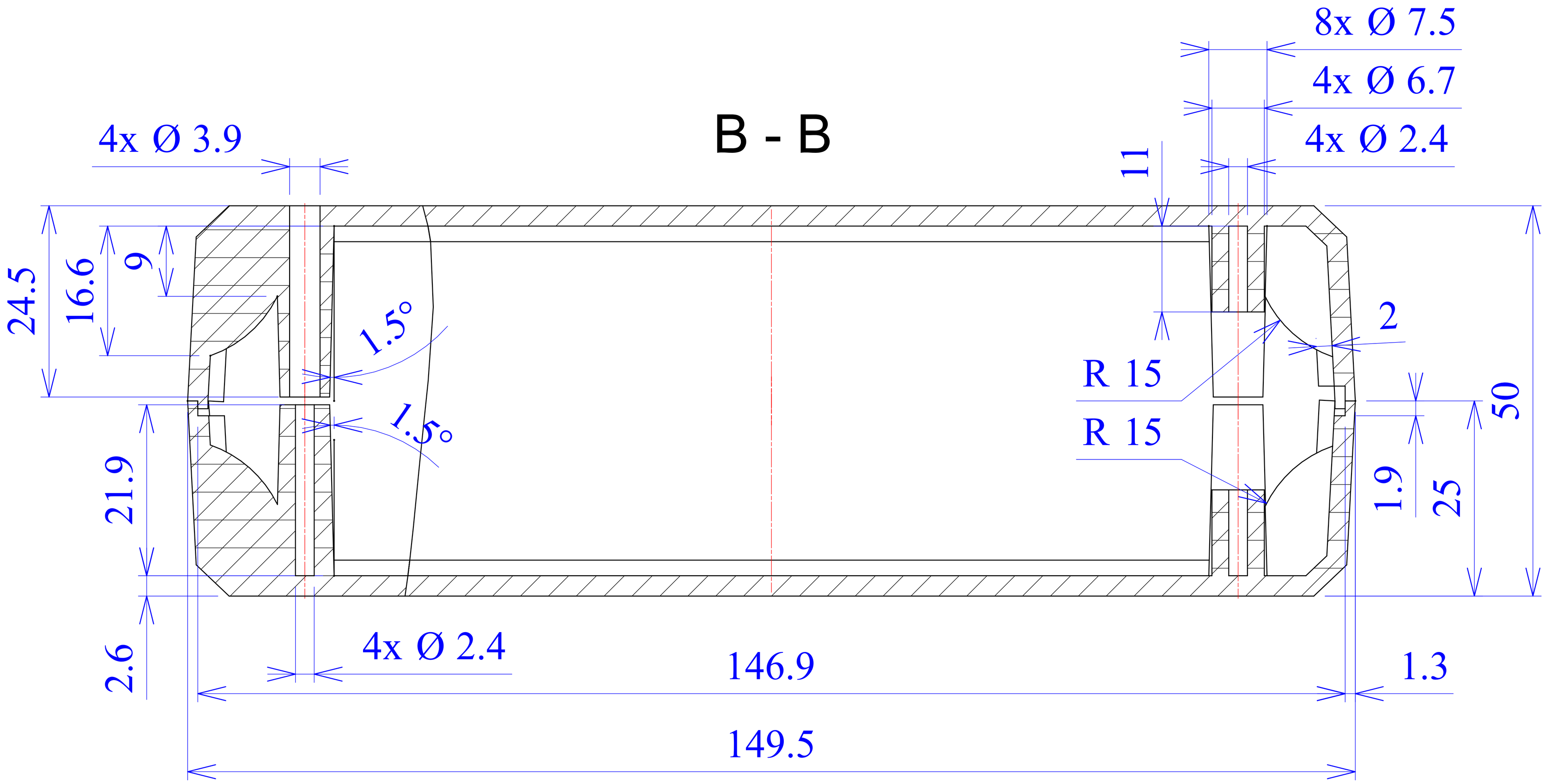
B - B
8x Ø 7.5
4x Ø 6.7
4x Ø 2.4
4x Ø 3.9
11
24.5
16.6
9
1.5°
1.5°
2
R 15
R 15
50
1.9
25
21.9
2.6
4x Ø 2.4
146.9
1.3
149.5

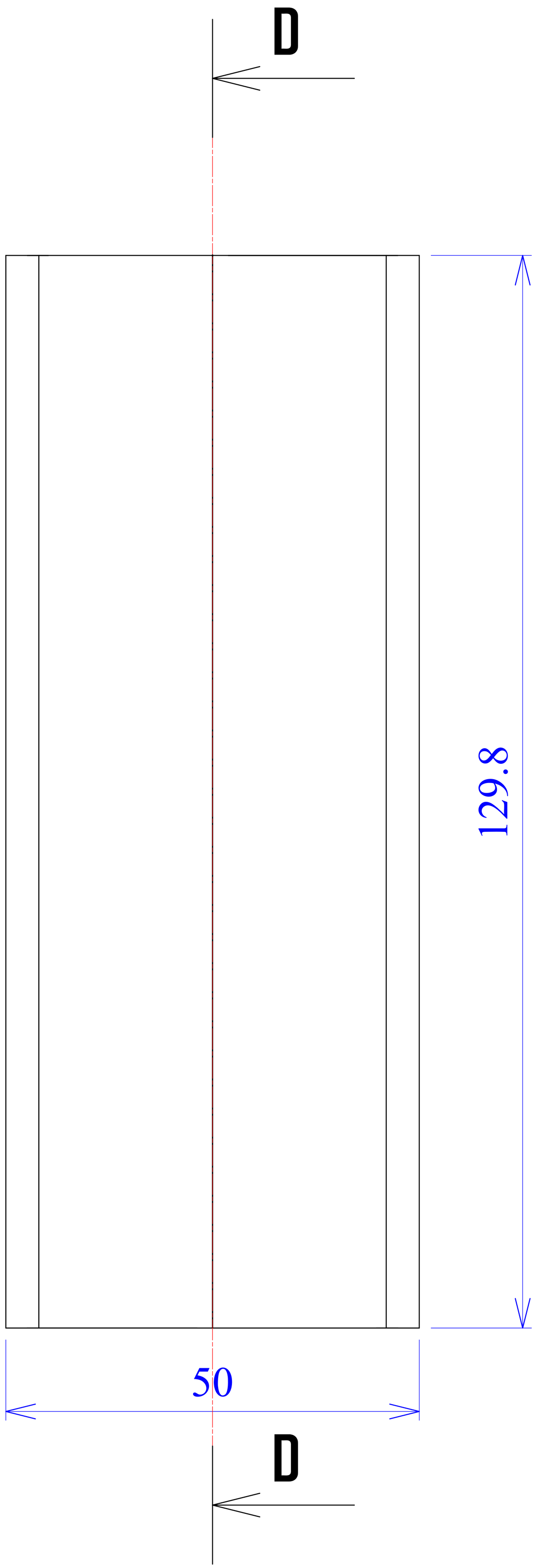
D
129.8
50
D

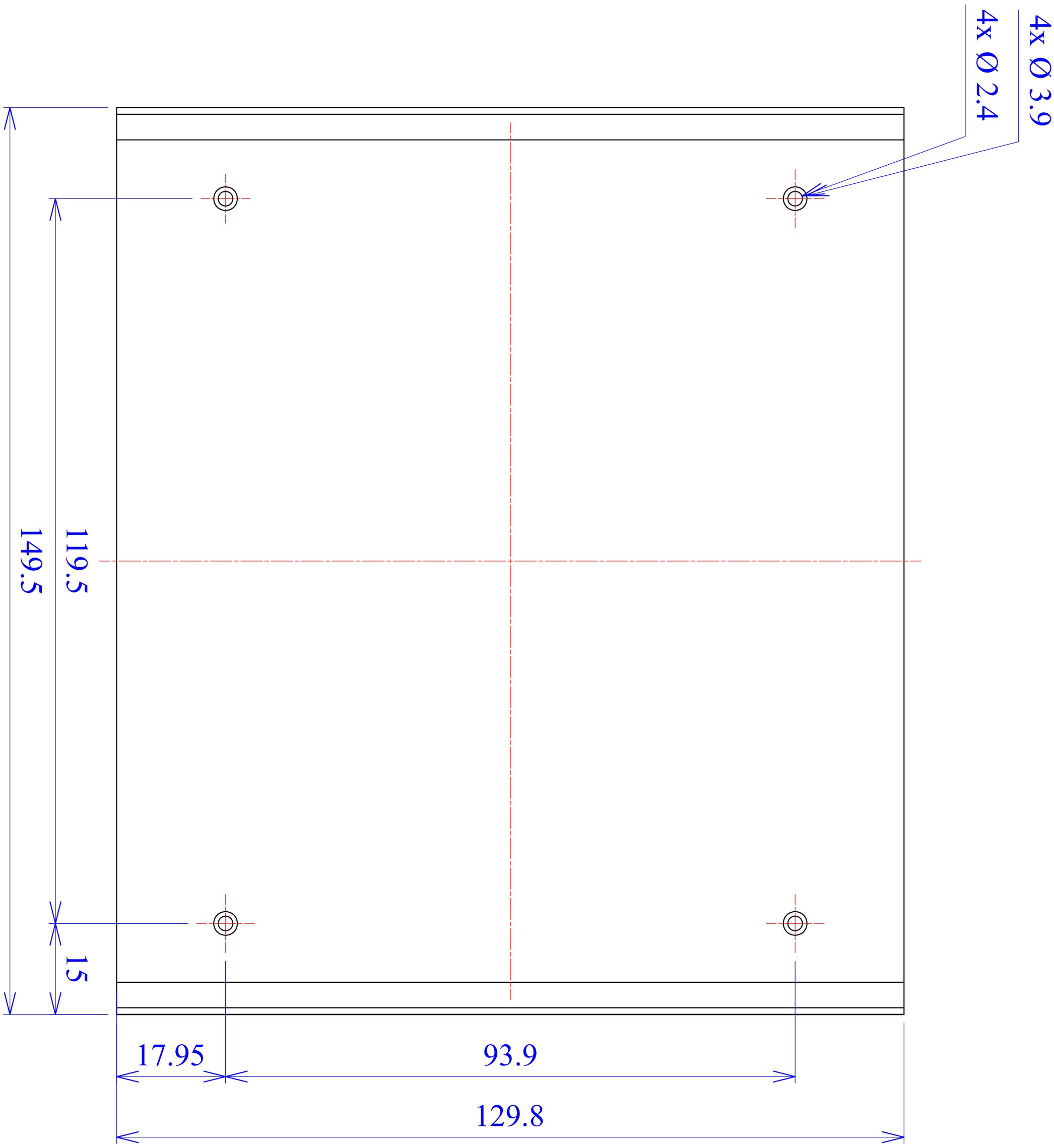
4x Ø 3.9
4x Ø 2.4
149.5
119.5
15
17.95
93.9
129.8

C - C

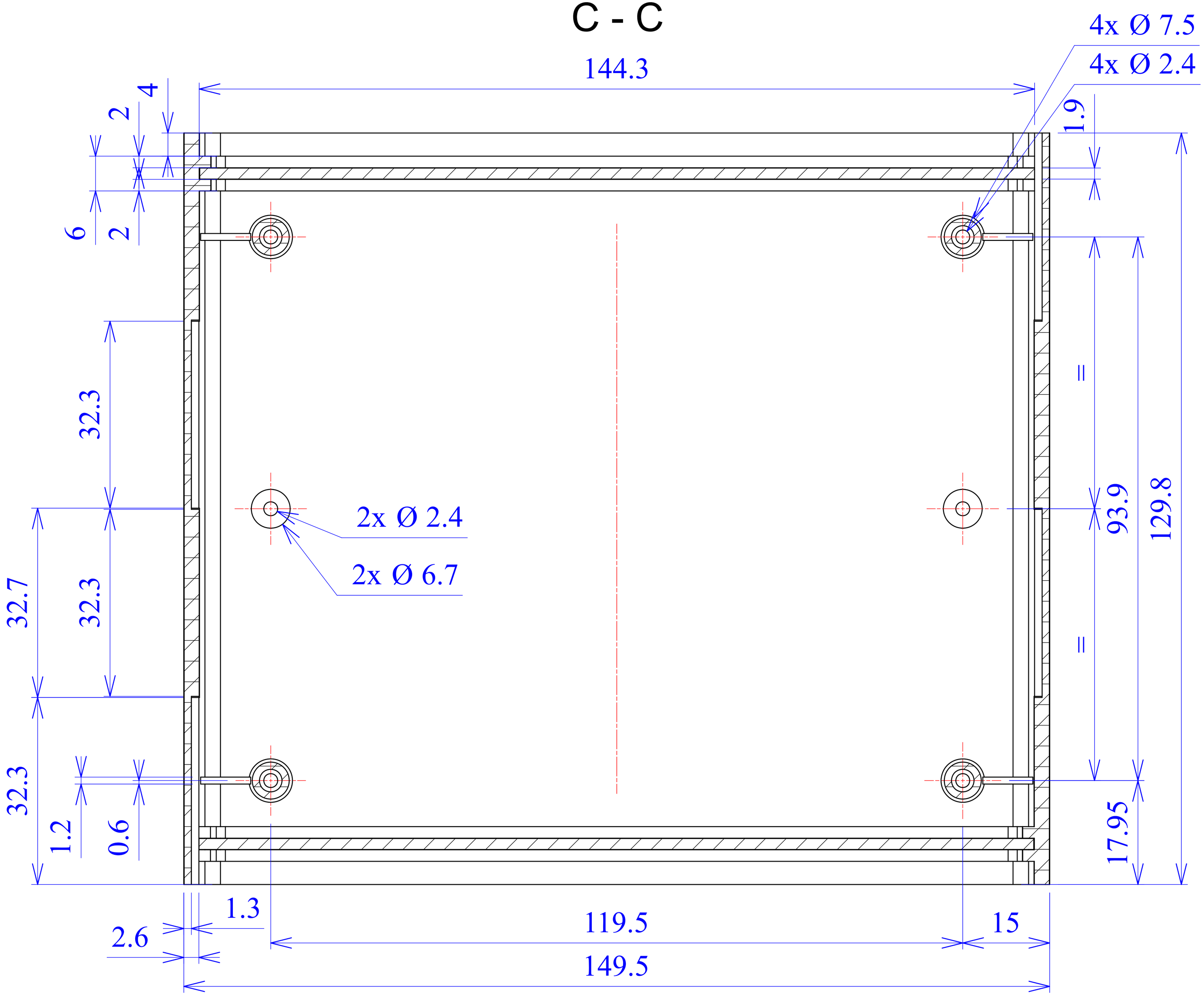
144.3
4x Ø 7.5
4x Ø 2.4
4
2
2
6
1.9
32.3
=
93.9
129.8
2x Ø 2.4
2x Ø 6.7
32.7
32.3
=
32.3
1.2
0.6
17.95
1.3
2.6
119.5
15
149.5

D - D

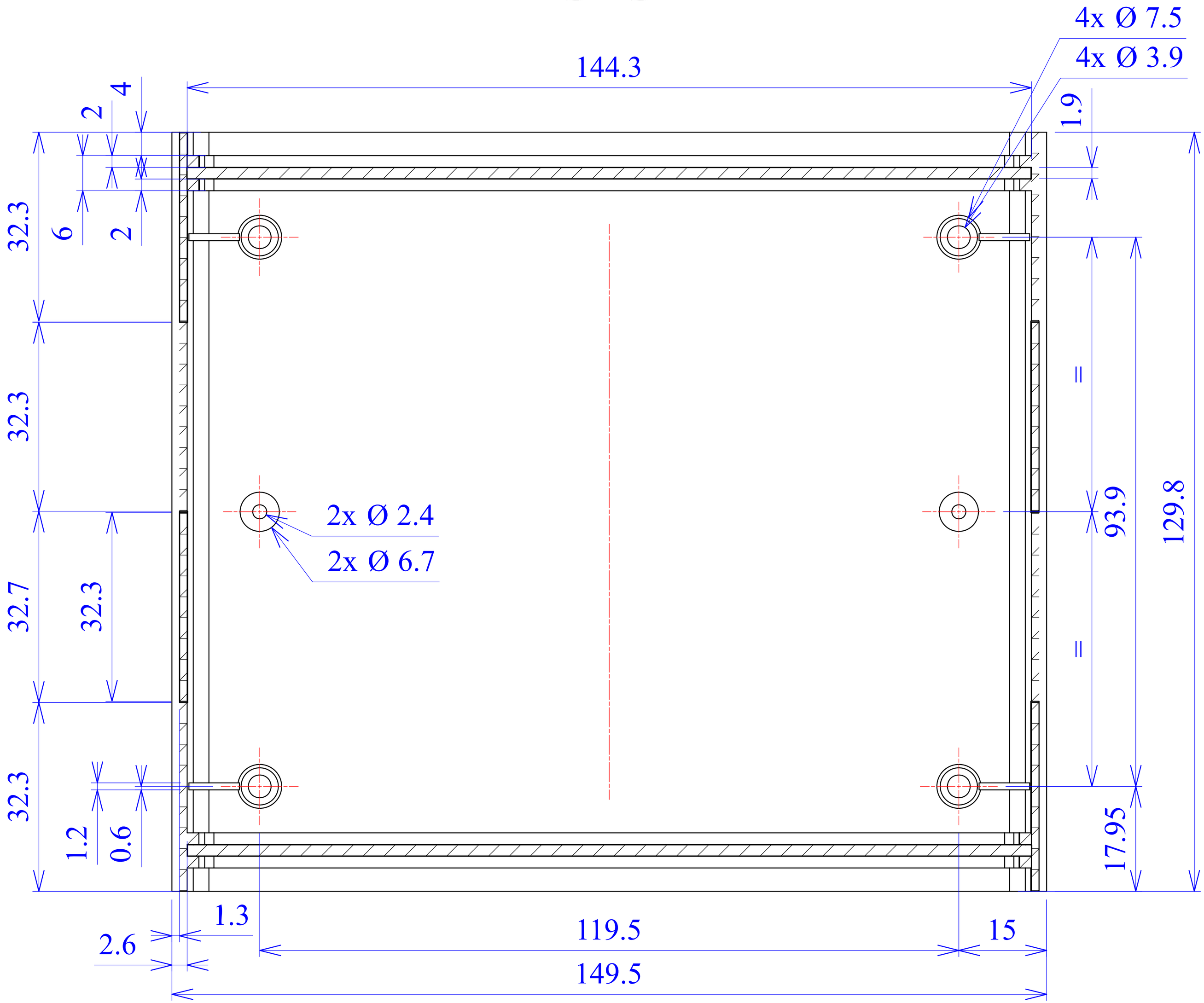
4x Ø 7.5
4x Ø 3.9
144.3
4
2
1.9
32.3
6
2
32.3
=
93.9
129.8
2x Ø 2.4
2x Ø 6.7
32.7
32.3
=
32.3
1.2
0.6
17.95
1.3
2.6
119.5
15
149.5