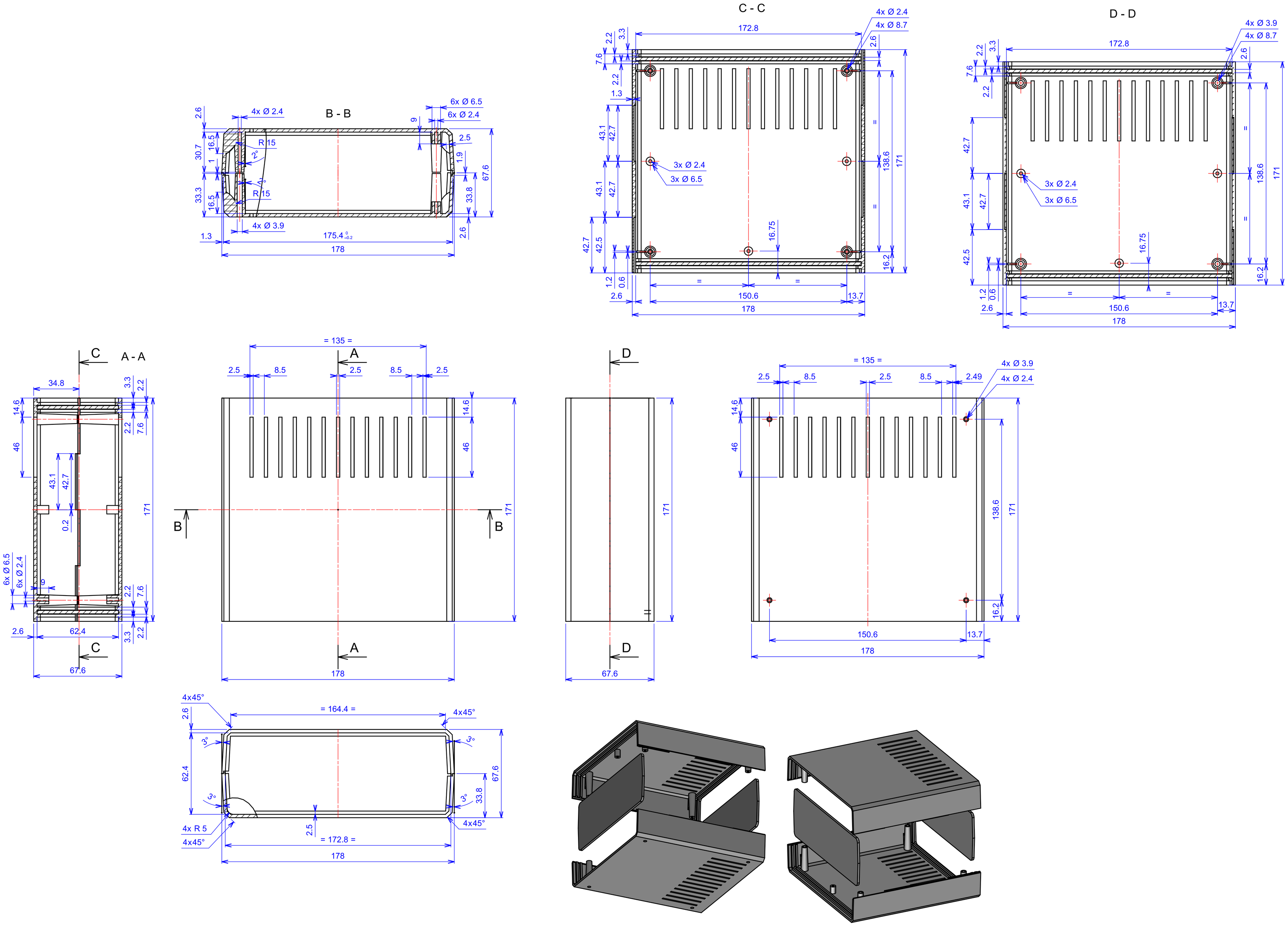
B - B
4x Ø 2.4
6x Ø 6.5
6x Ø 2.4
R 15
2°
4x Ø 3.9
175.4 0 -0.2
178
C - C
4x Ø 2.4
4x Ø 8.7
172.8
3x Ø 2.4
3x Ø 6.5
16.75
150.6
13.7
178
D - D
4x Ø 3.9
4x Ø 8.7
172.8
3x Ø 2.4
3x Ø 6.5
16.75
150.6
13.7
178
A - A
34.8
62.4
67.6
6x Ø 6.5
6x Ø 2.4
= 135 =
178
67.6
= 135 =
4x Ø 3.9
4x Ø 2.4
150.6
13.7
178
4x45°
= 164.4 =
62.4
67.6
33.8
4x R 5
4x45°
= 172.8 =
178

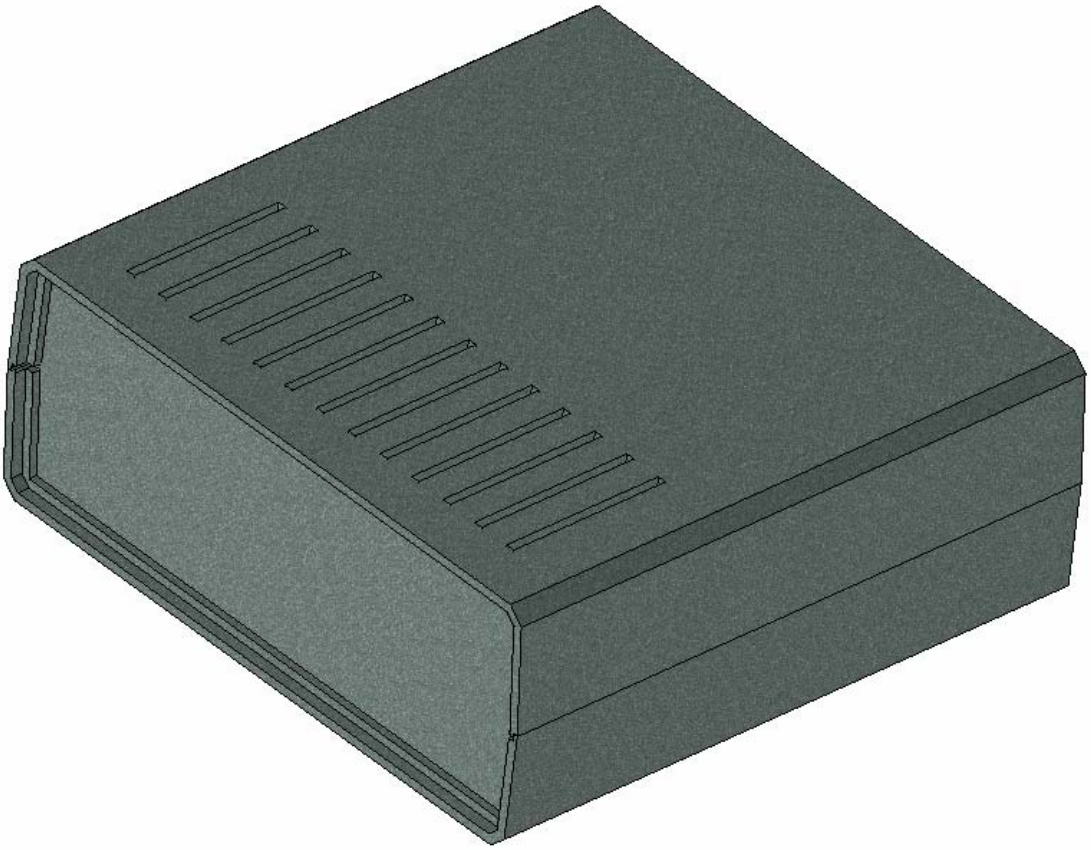

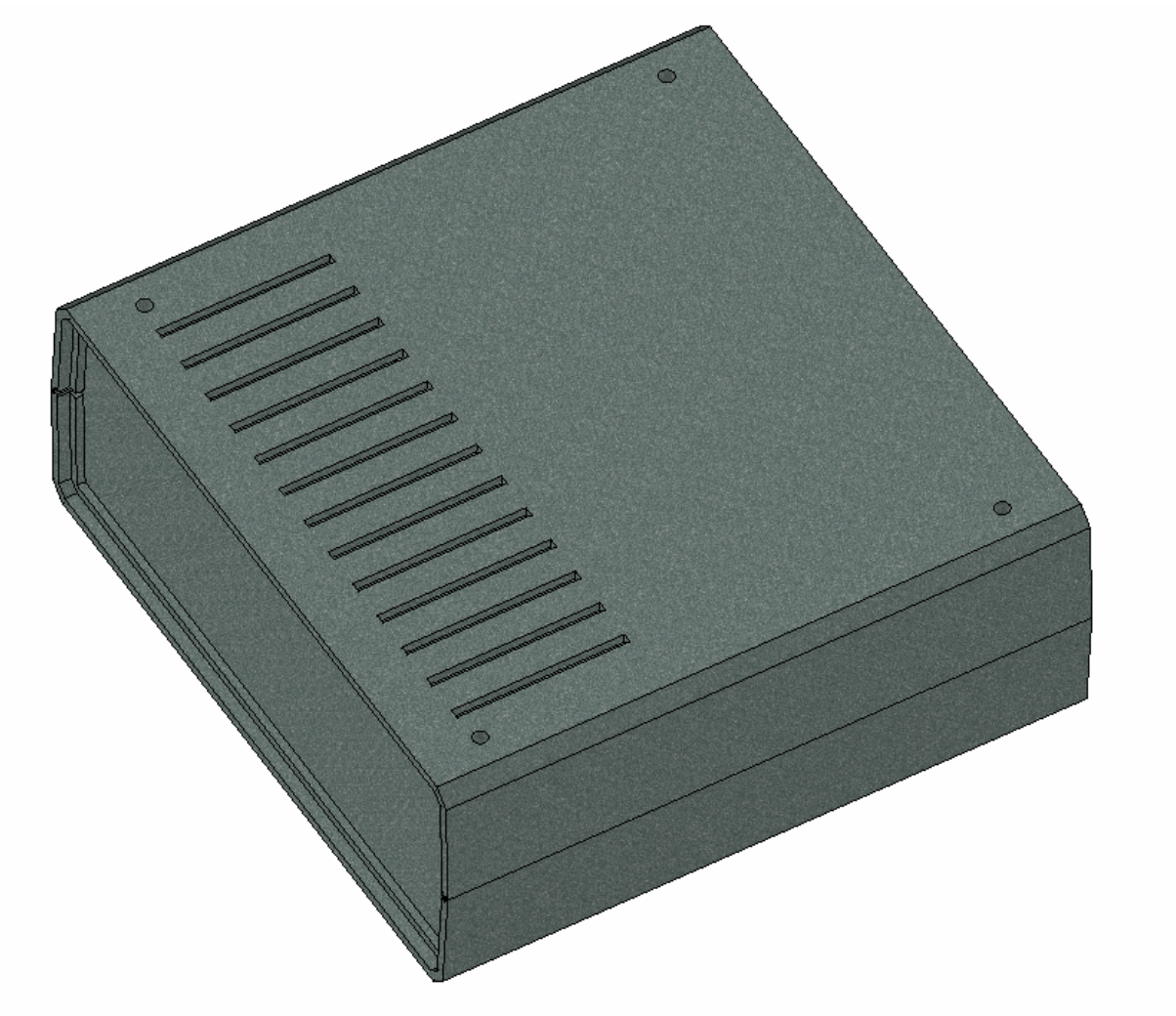

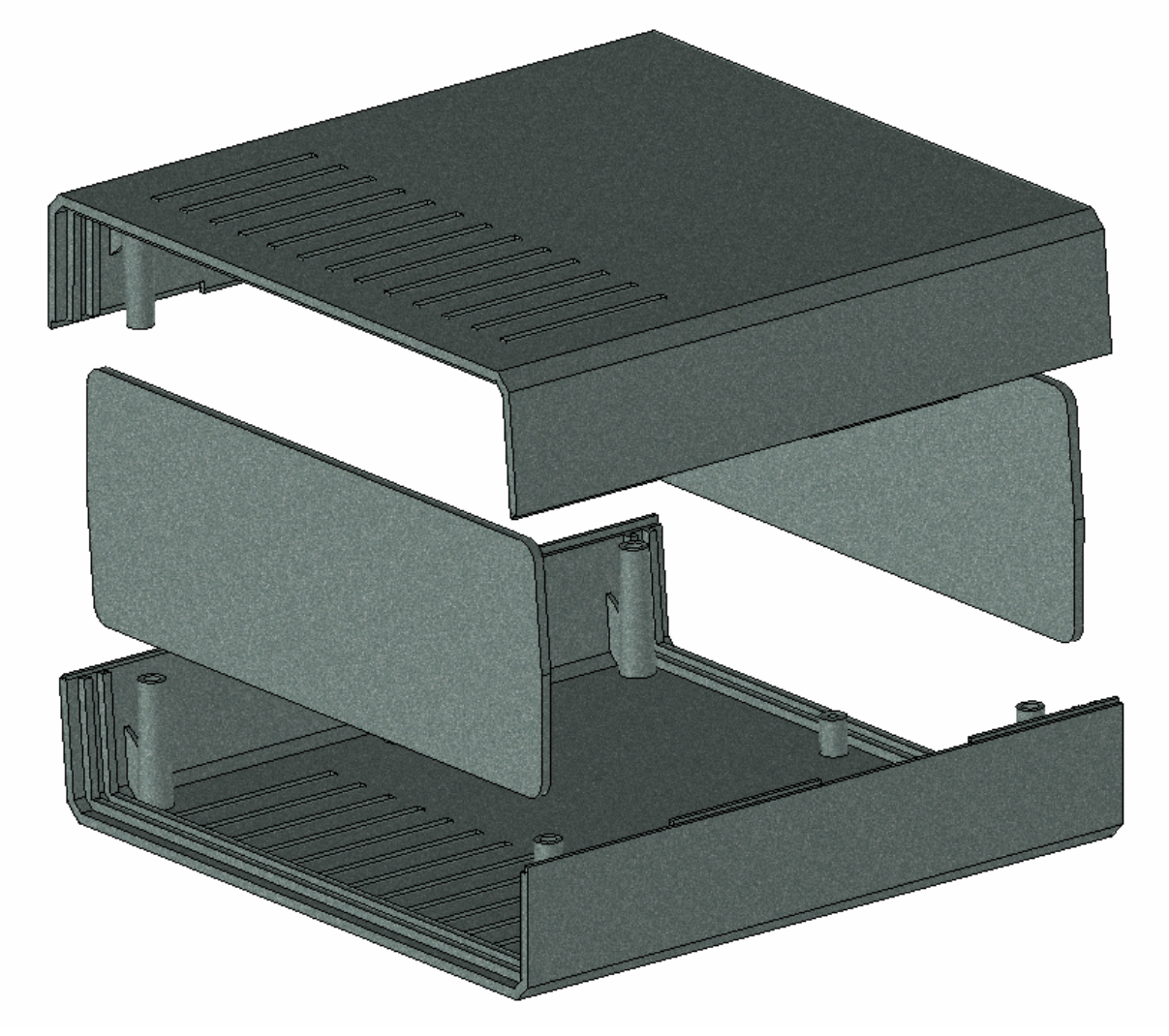

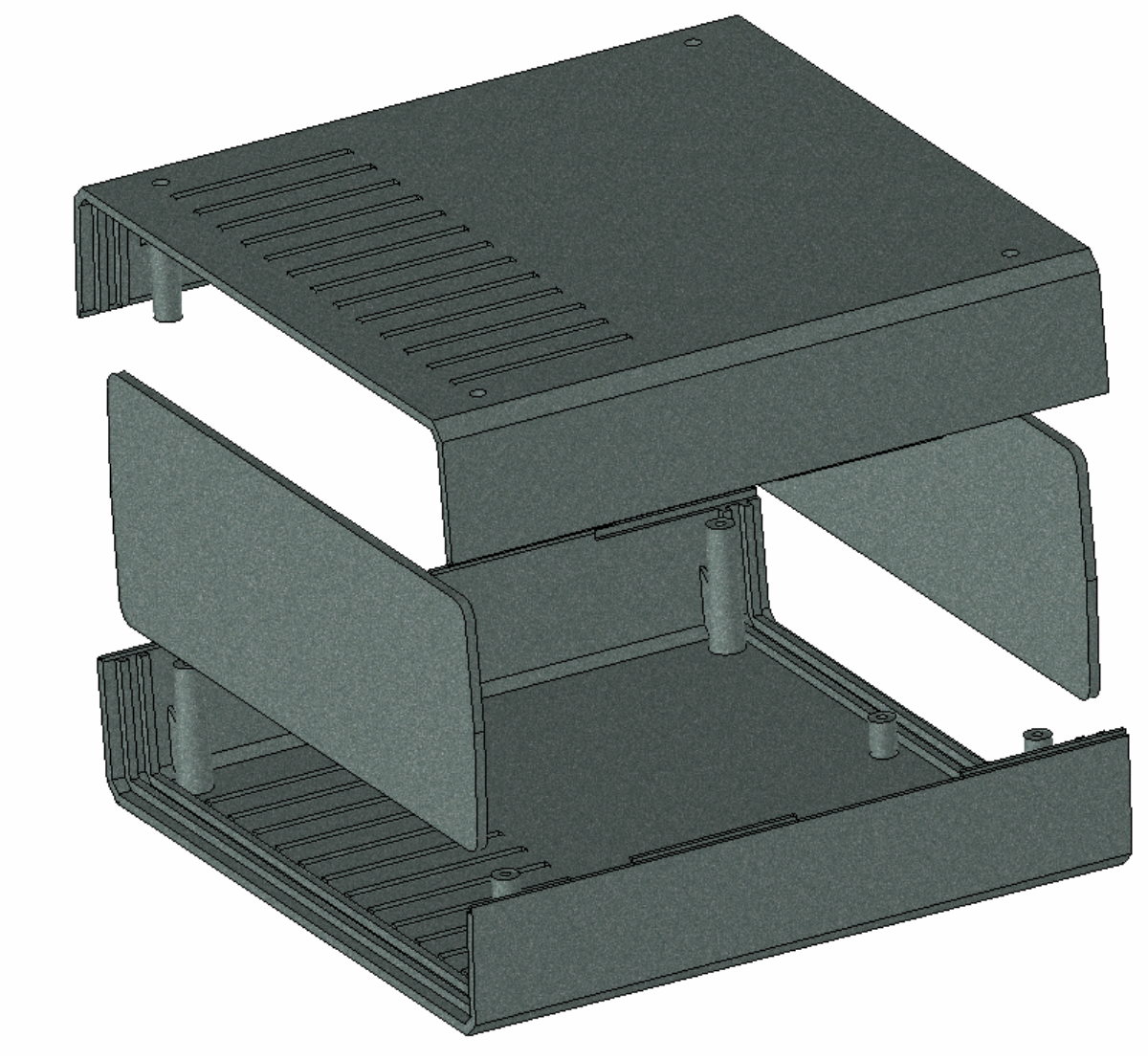

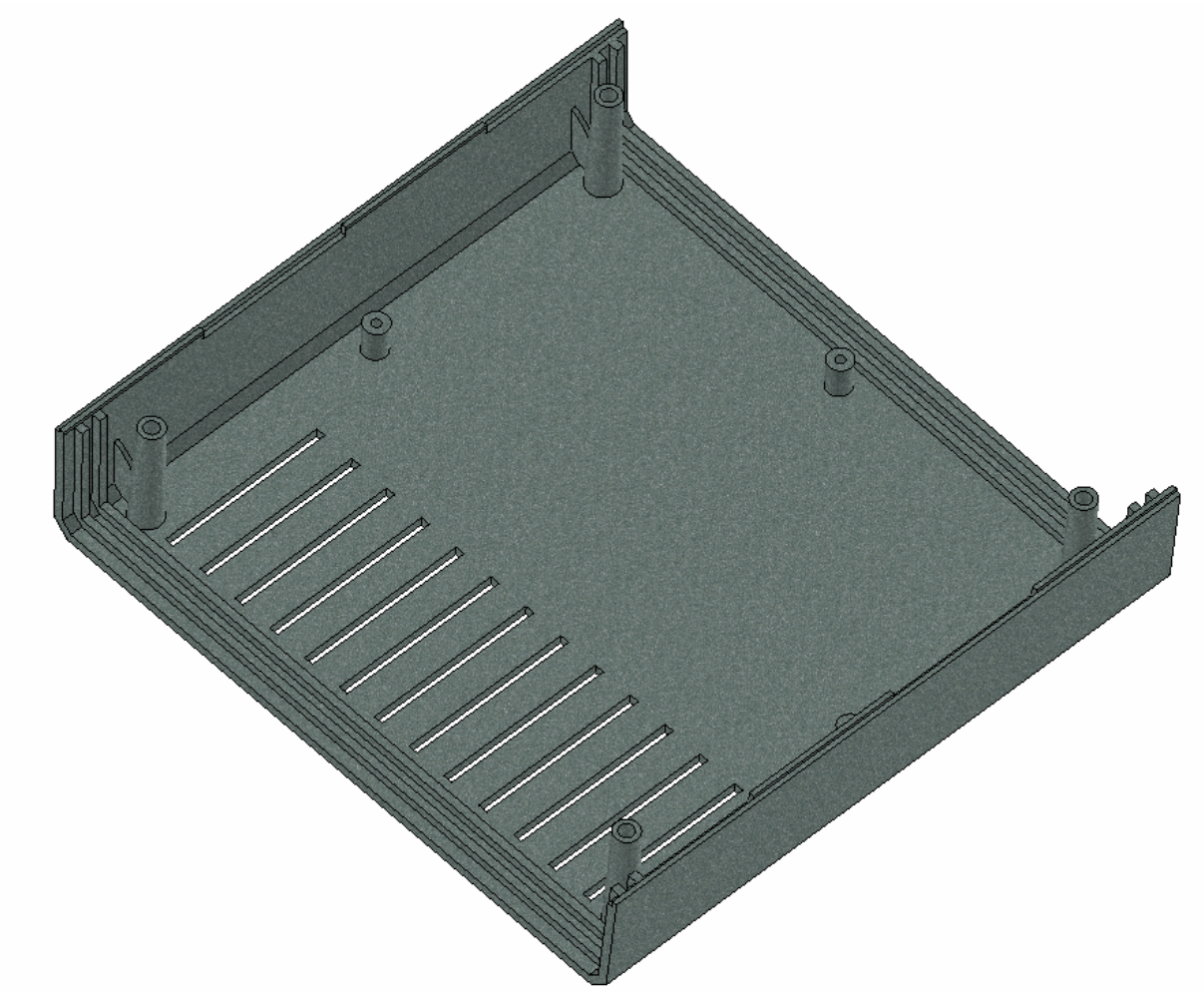

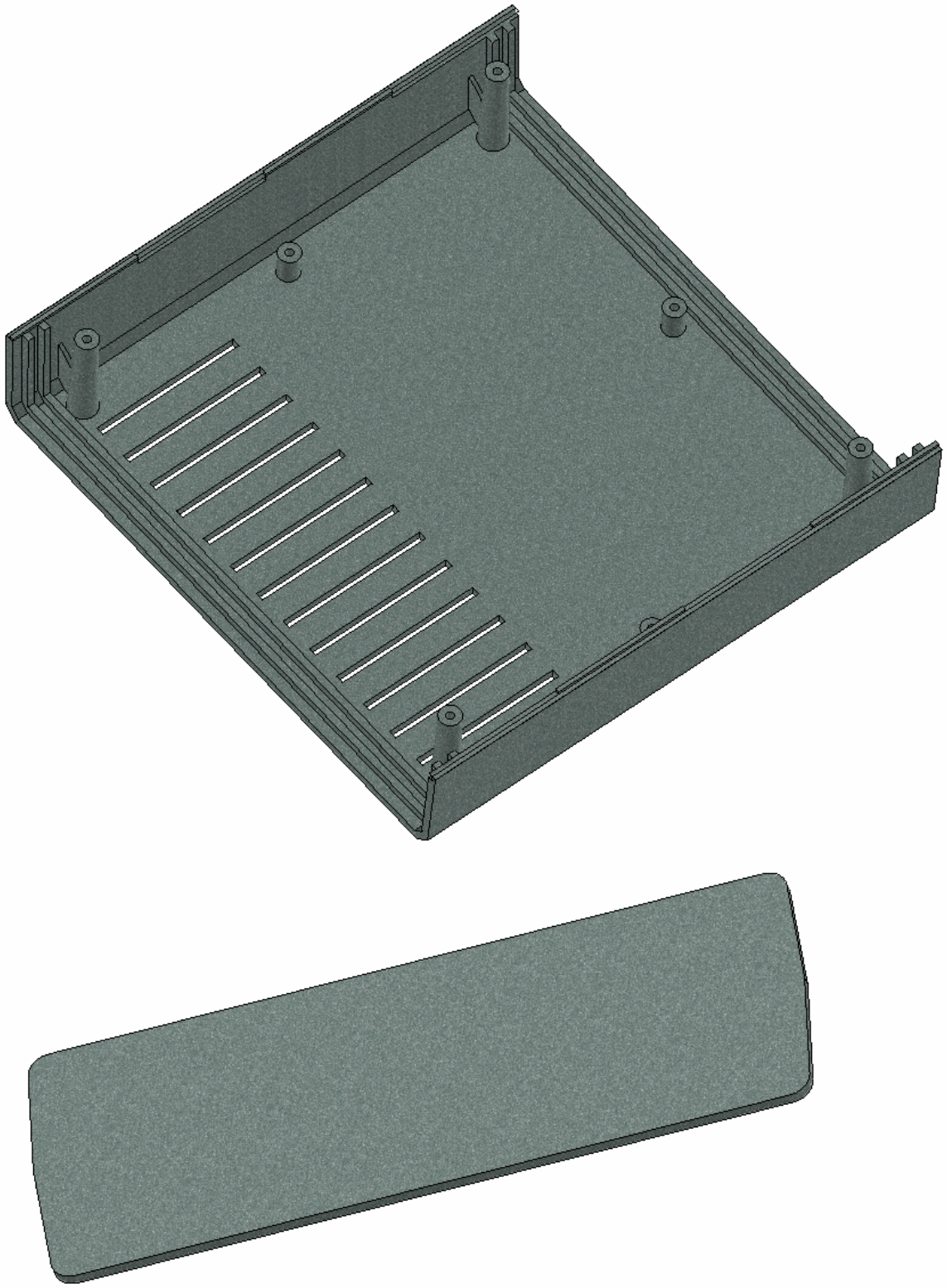

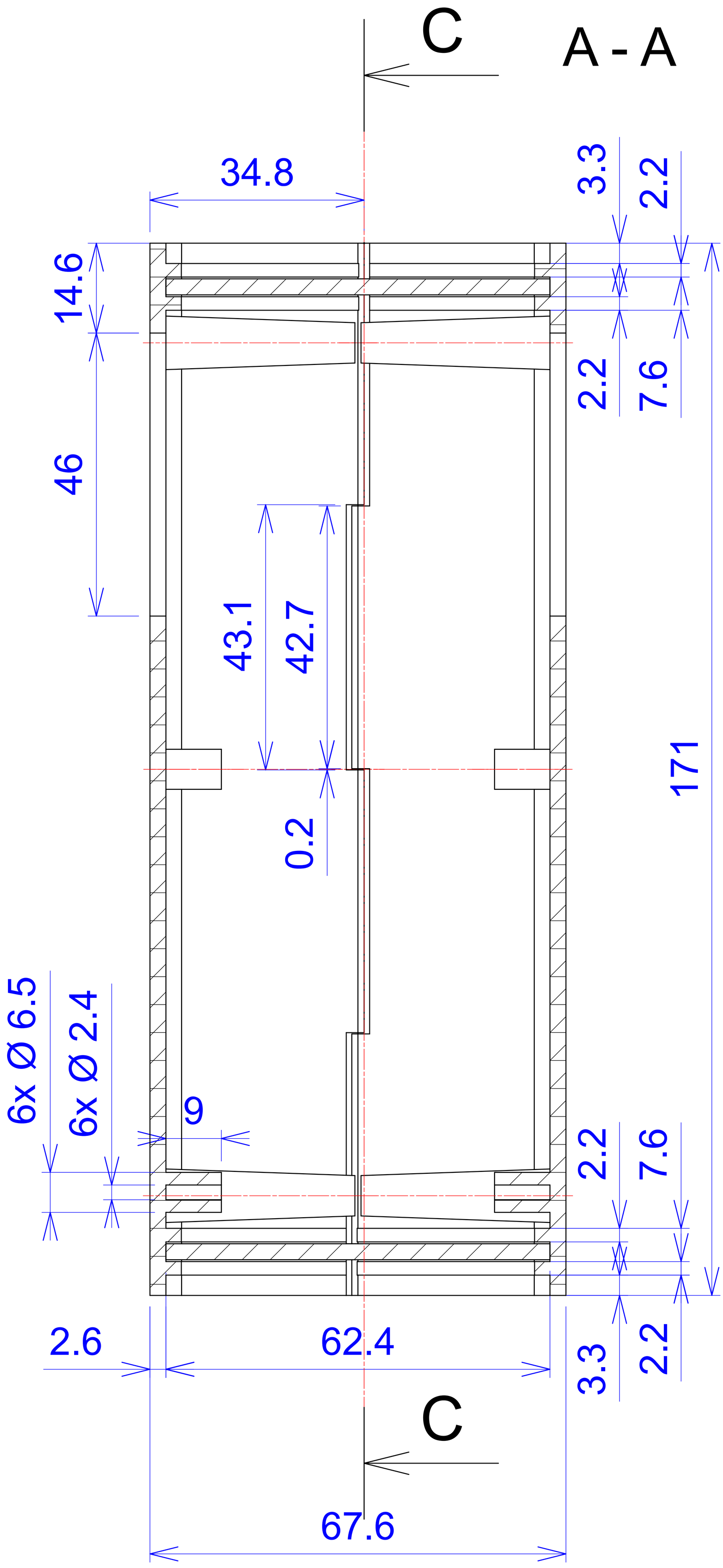
C
A - A
34.8
3.3
2.2
14.6
2.2
7.6
46
43.1
42.7
171
0.2
6x Ø 6.5
6x Ø 2.4
9
2.2
7.6
2.6
62.4
3.3
2.2
C
67.6

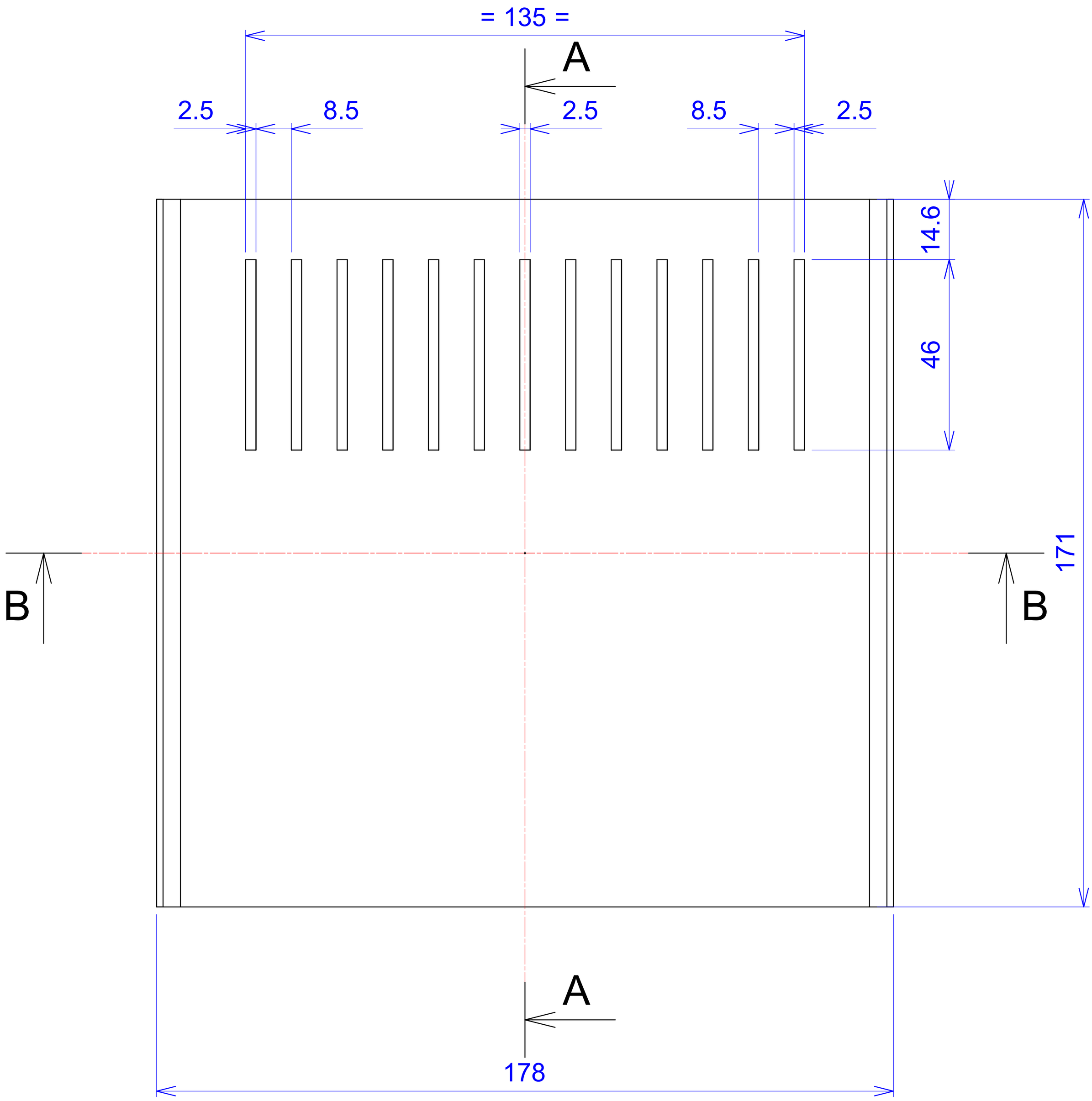
= 135 =
A
2.5
8.5
2.5
8.5
2.5
14.6
46
171
B
B
A
178

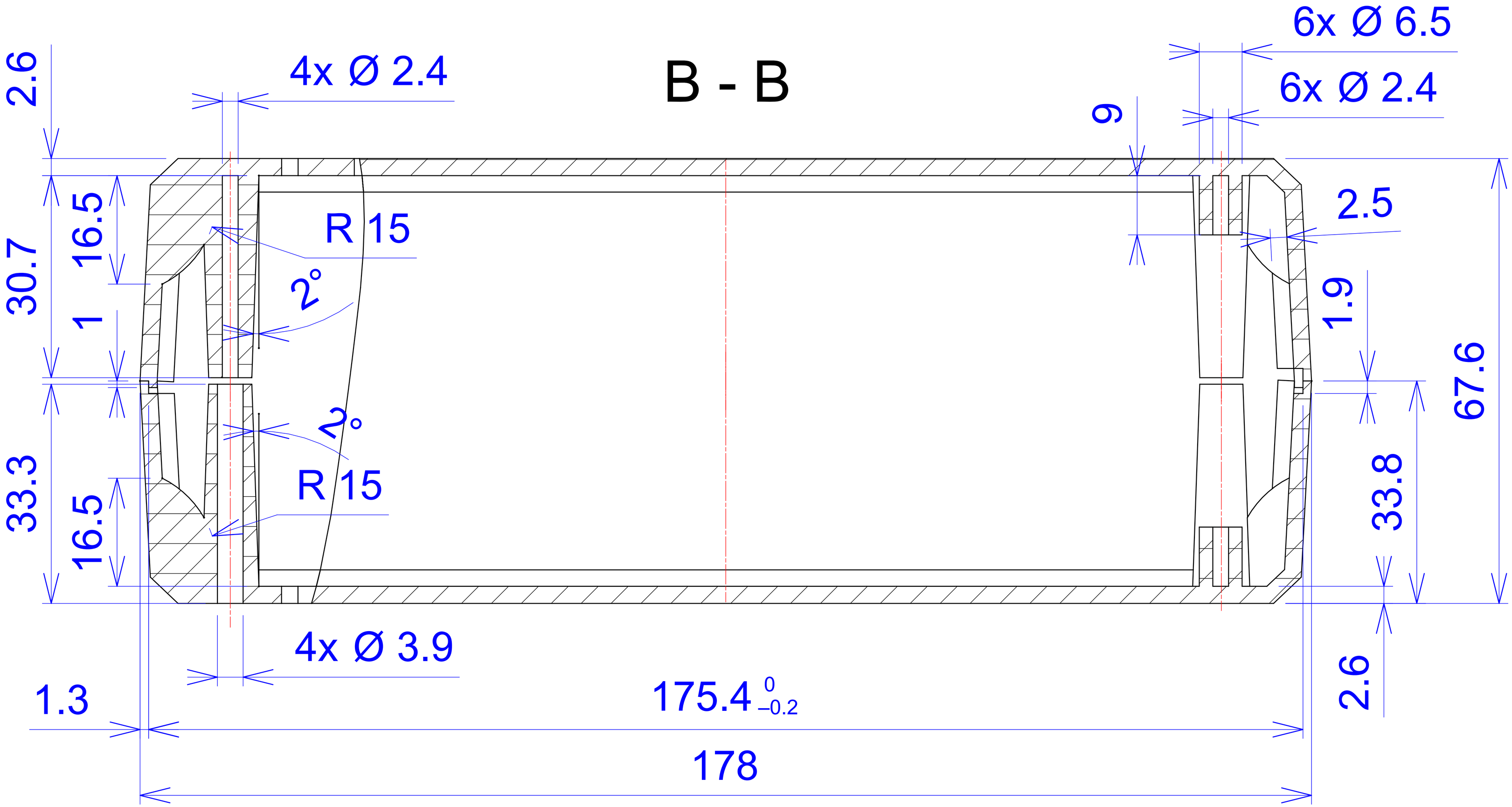
B - B
4x Ø 2.4
6x Ø 6.5
6x Ø 2.4
2.6
9
2.5
30.7
16.5
1
R 15
2°
1.9
67.6
33.3
16.5
2°
R 15
33.8
4x Ø 3.9
2.6
1.3
175.4 0 −0.2
178

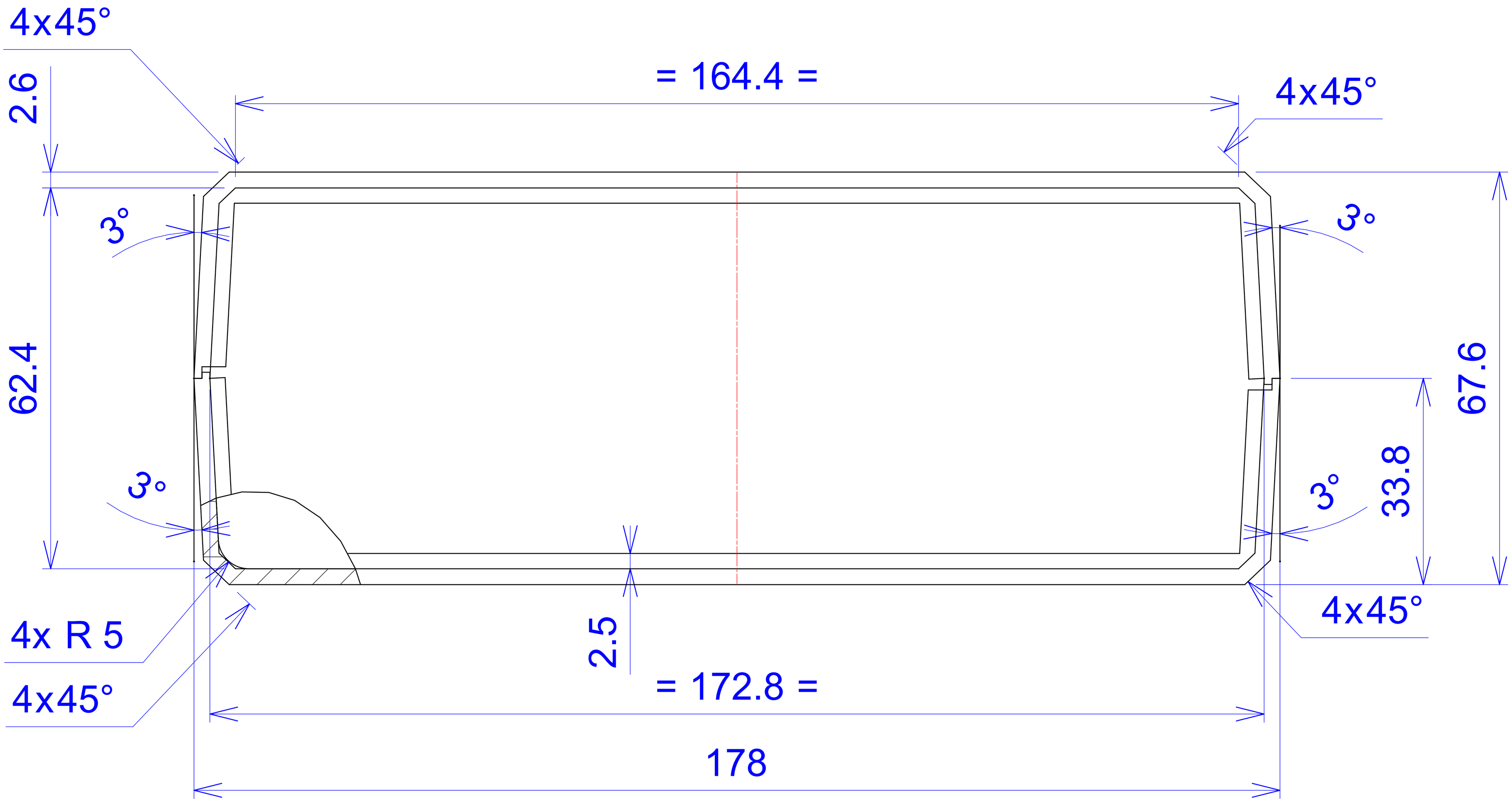
4x45°
= 164.4 =
4x45°
2.6
3°
3°
62.4
67.6
3°
33.8
3°
4x R 5
4x45°
2.5
4x45°
= 172.8 =
178

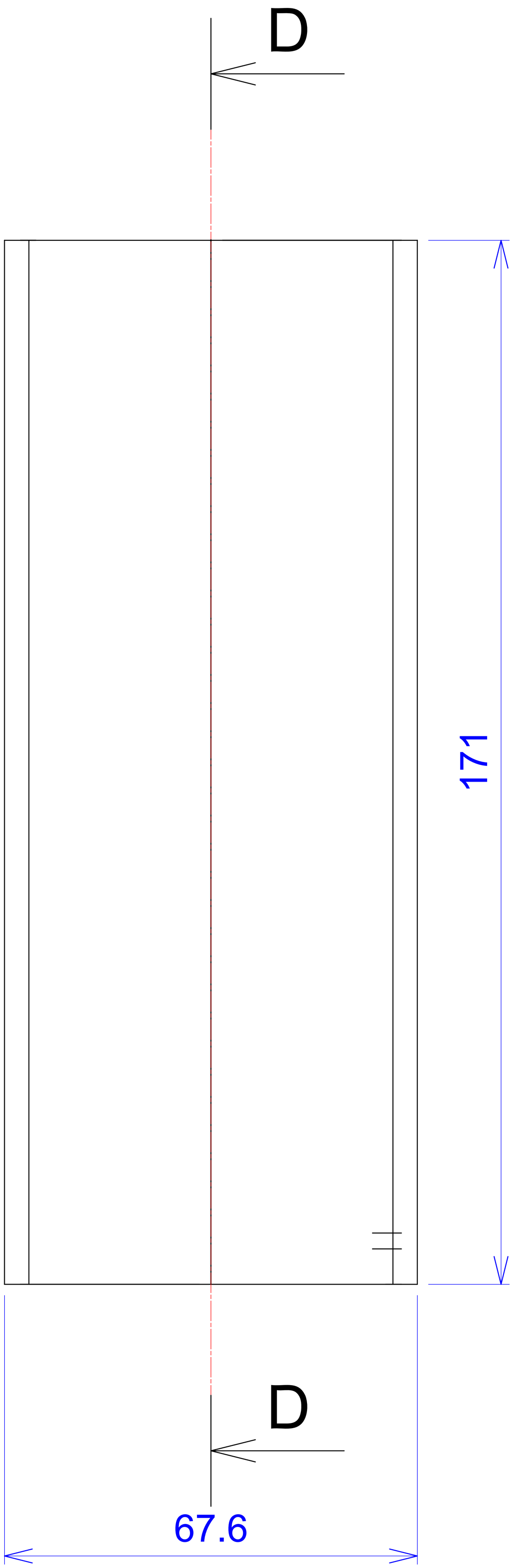
D
171
D
67.6

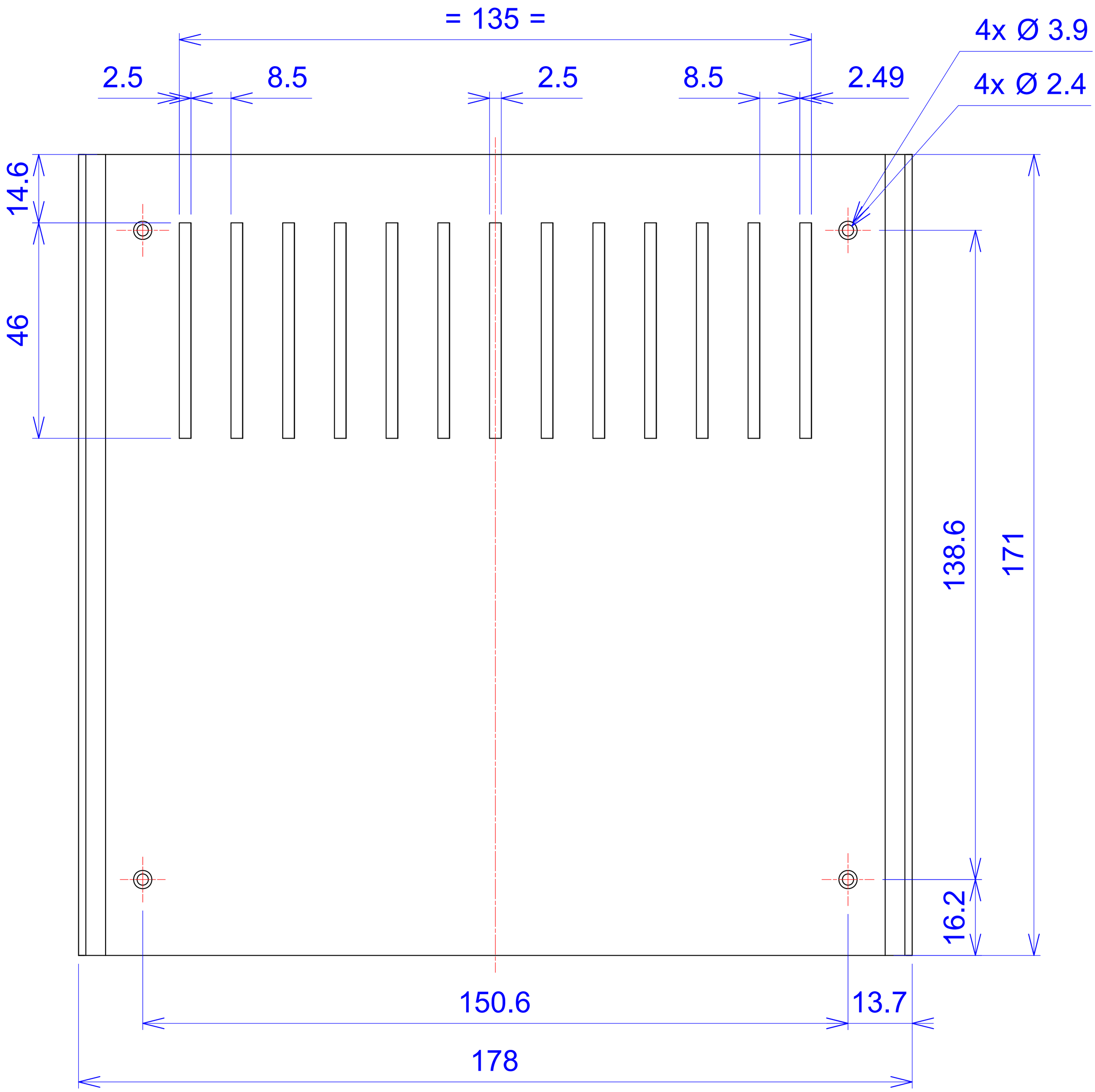
= 135 =
4x Ø 3.9
4x Ø 2.4
2.5
8.5
2.5
8.5
2.49
14.6
46
138.6
171
16.2
150.6
13.7
178

C - C

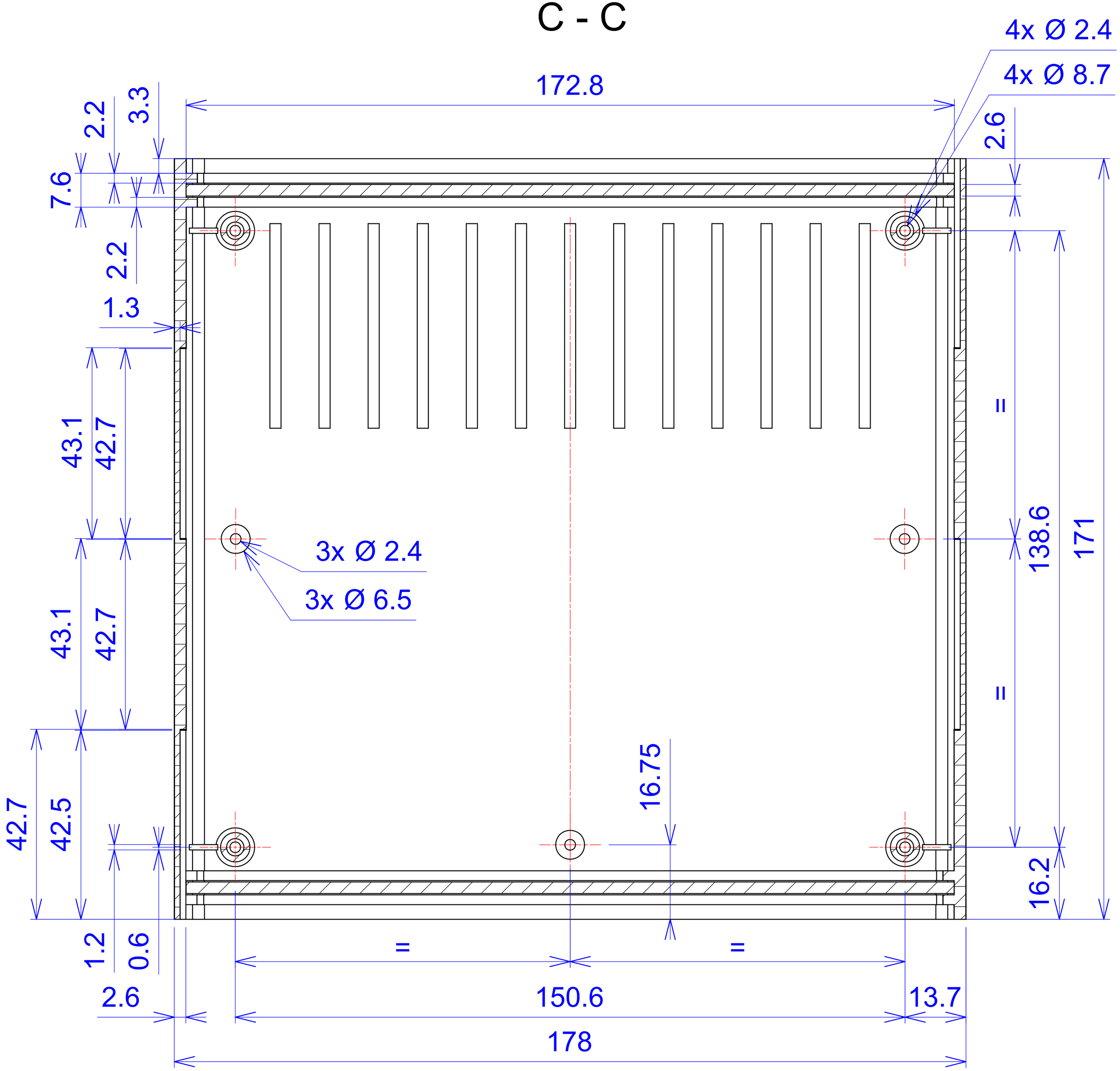
4x Ø 2.4
4x Ø 8.7
172.8
2.2
3.3
7.6
2.2
1.3
2.6
43.1
42.7
=
138.6
171
3x Ø 2.4
3x Ø 6.5
43.1
42.7
=
16.75
42.7
42.5
16.2
1.2
0.6
=
=
2.6
150.6
13.7
178

D - D

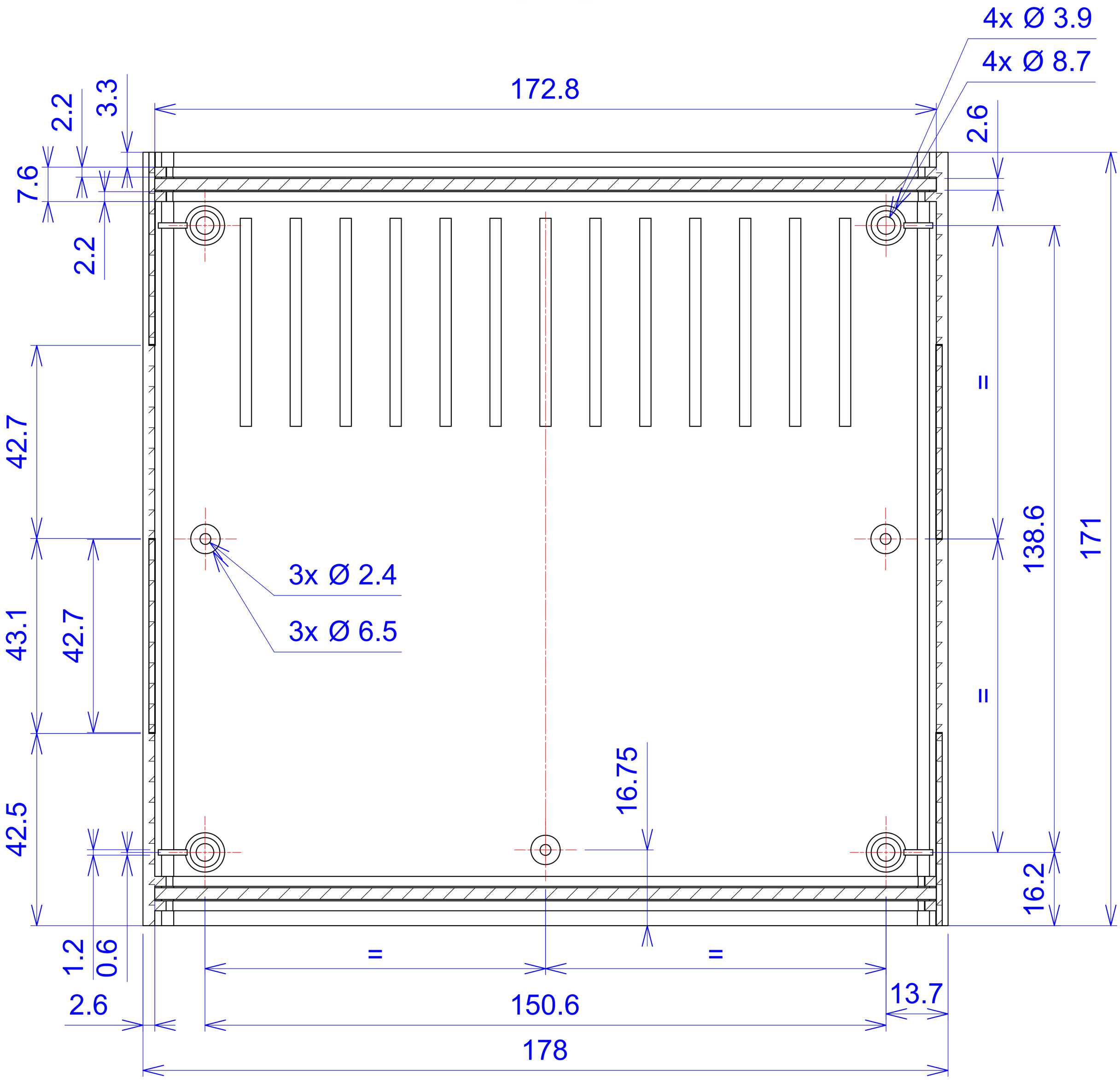
4x Ø 3.9
4x Ø 8.7
172.8
2.2
3.3
7.6
2.2
2.6
42.7
43.1
42.7
42.5
3x Ø 2.4
3x Ø 6.5
=
138.6
171
=
16.75
16.2
1.2
0.6
2.6
=
=
150.6
13.7
178